PARTS CATALOG

Ver.1

DUPRINTER DP-63S

Duplo

Assembly Location Diagram

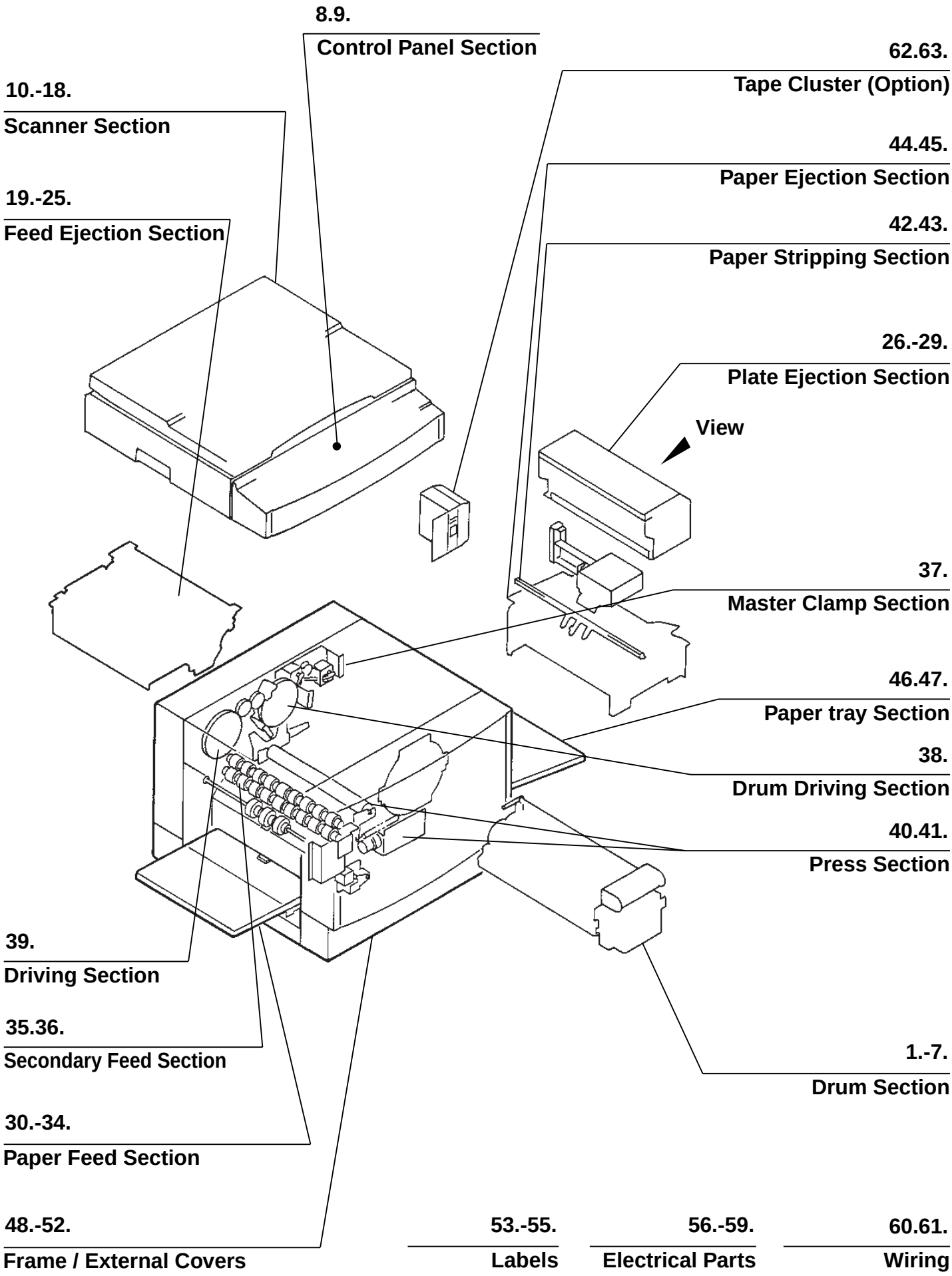

Table of Contents

■ PARTS LIST 1
1. Drum Section I 1
1-1. Unit/Assy 2
1-2. Unit/Assy 3
2. Drum Section II 4
3. Drum Section III 5
4. Drum Section IV 6
4-1. Unit/Assy 7
5. Drum Section V 8
5-1. Unit/Assy 9
6. Drum Section VI 10
6-1. Unit/Assy 11
7. Drum Section VII 12
7-1. Unit/Assy 13
8. Control Panel Section I 14
9. Control Panel Section II 15
10. Scanner Section I 16
11. Scanner Section II 17
11-1. Unit/Assy 18
12. Scanner Section III 19
13. Scanner Section IV 20
14. Scanner Section V 21
15. Scanner Section VI 22
16. Scanner Section VII 23
17. Scanner Section VIII 24
18. Scanner Section IX 25
19. Feed Ejection Section I 26
20. Feed Ejection Section II 27
20-1. Unit/Assy 28
21. Feed Ejection Section III 29
22. Feed Ejection Section IV 30
23. Feed Ejection Section V 31
24. Feed Ejection Section VI 32
25. Feed Ejection Section VII 33
26. Plate Ejection Section I 34
26-1. Unit/Assy 35
27. Plate Ejection Section II 36
28. Plate Ejection Section III 37
29. Plate Ejection Section IV 38
30. Paper Feed Section I 39
30-1. Unit/Assy 40
31. Paper Feed Section II 41
32. Paper Feed Section III 42
32-1. Unit/Assy 43
33. Paper Feed Section IV 44

33-1. Unit/Assy 45
34. Paper Feed Section V 46
34-1. Unit/Assy 47
35. Secondary Feed Section I 48
35-1. Unit/Assy 49
36. Secondary Feed Section II 50
37. Master Clamp Section 51
37-1. Unit/Assy 52
38. Drum Driving Section 53
38-1. Unit/Assy 54
39. Driving Section 55
39-1. Unit/Assy 56
40. Press Section I 57
40-1. Unit/Assy 58
41. Press Section II 59
41-1. Unit/Assy 60
42. Paper Stripping Section I 61
42-1. Unit/Assy 62
43. Paper Stripping Section II 63
44. Paper Ejection Section I 64
45. Paper Ejection Section II 65
46. Paper Receiving Section I 66
47. Paper Receiving Section II 67
48. Frame I 68
49. Frame II 69
50. Frame III 70
51. Cover I 71
52. Cover II 72
53. Labels I 73
54. Labels I(A/B size) 74
55. Labels I(Inch size) 75
56. Electrical Parts I 76
57. Electrical Parts II 77
58. Electrical Parts III 78
59. Electrical Parts IV 79
60. Wiring I 80
61. Wiring II 81
62. Tape Cluster Section I 82
63. Tape Cluster Section II 83
■ INDEX 85

GUIDE TO THE PARTS CATALOG

How to find a part/unit/assembly

- Referring to the Table of Contents, search a page of a section in which the target part/unit/assembly is installed.
- To find a part contained in a unit or an assembly, search a relevant Unit/Assy page.

EXPLANATIONS OF PARTS LISTS

(1) KEY No. :

- The key numbers correspond to the individual numbers in the figure.
- The key numbers enclosed with a circle show units or assemblies.
- On the Unit/Assy pages, the key numbers preceded with "−" show parts comprising the unit or assembly enclosed with a circle.

Ex. ① : Roller unit

−1
−2
−3
} Parts comprising the roller unit

(2) PARTS No. :

- The parts numbers include the numbers assigned to parts, units or assemblies.
- When the same part, unit or assembly varies in its specifications to meet local requirements or standards, several parts numbers are assigned to such a part, unit or assembly. Refer to the REMARKS column.
- **When ordering parts, units and/or assemblies, make sure to specify their parts numbers on your order sheet.**

NOTE: **Parts, units or assemblies denoted with "NPN" in the PARTS No. column are not available.**

- The last digit of the parts number shows the version. When specifications have been changed for improvement, this digit may be changed. Any changes in specifications will be informed you in the Technical Information.

Ex. J3−10001
Digit indicating the version

(3) DESCRIPTION :

- The names of parts, units or assemblies are given in both Japanese and English in this column.
- **When ordering parts, units and/or assemblies, make sure to specify their names apart from their parts numbers.**

(4) Q'TY :

- The quantity of parts illustrated in the figure is given in this column.
- For parts incorporated in a unit or an assembly, this column shows the quantity of parts per unit or assembly.

(5) REMARKS :

- Abbreviations in this column mean particular specifications or power requirements.

Ex.

D	:	For domestic use in Japan
120V	:	Rated at 120V
230V	:	Rated at 230V
EA	:	For AB-sized paper
EI	:	For inch-sized paper

Explanations of the index

(1) PARTS No.

- This column shows parts numbers in ascending order.

(2) SECTION :

- This column shows the number of a section in which the relevant part, unit or assembly is installed.

  When two or more sections use the same part, unit or assembly, several section numbers are given in the column.

(3) PAGE :

- This column shows the number of the page listing the relevant part.

  When two or more sections use the same part, unit or assembly, several page numbers are given in the column.

(4) KEY No. :

- The key numbers show the numbers of the section page illustrating the relevant parts.

  The key numbers of parts contained in a unit or an assembly are shown in the form of "KEY No.of the unit or assembly − KEY No. of the parts".

Ex. ① − 2 Roller contained in the roller unit.

(5) Remarks :

- Abbreviations in this column mean particular specifications or power requirements.

1. Drum Section I

MODEL DP-63S

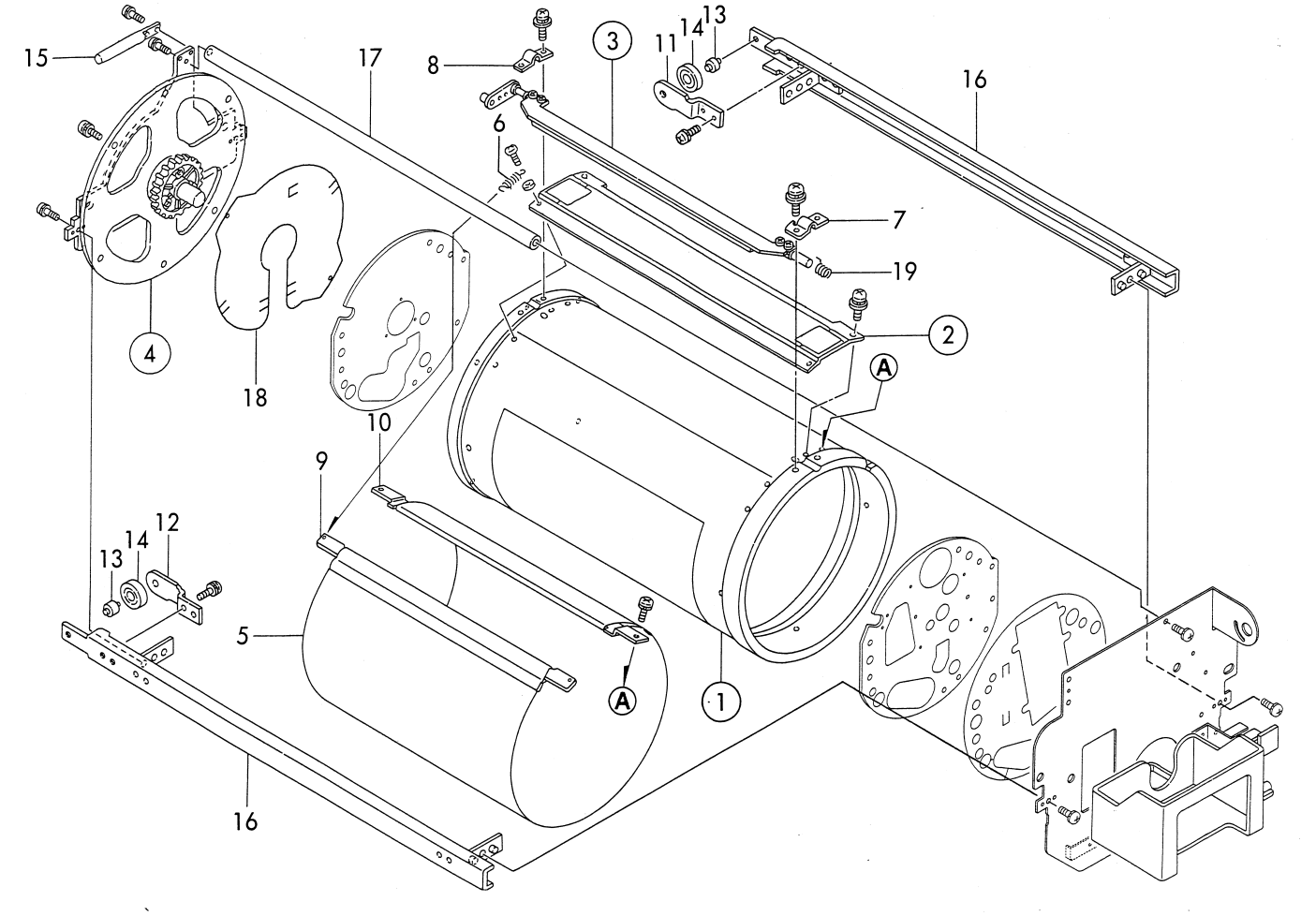

KEY No.	PARTS No.	DESCRIPTION	Q'TY	REMARKS
①	J3-S0002	Drum assy	1	
②	J3-S0003	Base assy	1	
③	J3-S0004	Clamp plate assy	1	
④	L1-A7010	Outer frame L assy	1	
5	J3-A1200	Screen	1	
6	C9-11280	Spring T	2	
7	J3-A1051	Bearing plate R	1	
8	J3-A1061	Bearing plate L	1	
9	J3-A1182	Bar	1	
10	J3-A1191	Bar	1	
11	C9-12381	Bracket R	1	
12	C9-12391	Bracket L	1	
13	C9-12400	Shaft	2	
14	C9-12410	Roller	2	
15	E1-15420	Arm	1	
16	J3-A7010	Rail unit	2	
17	J3-A7040	Stay	1	
18	J3-A7091	Cover L	1	
19	J8-A1250	Spring To	1	

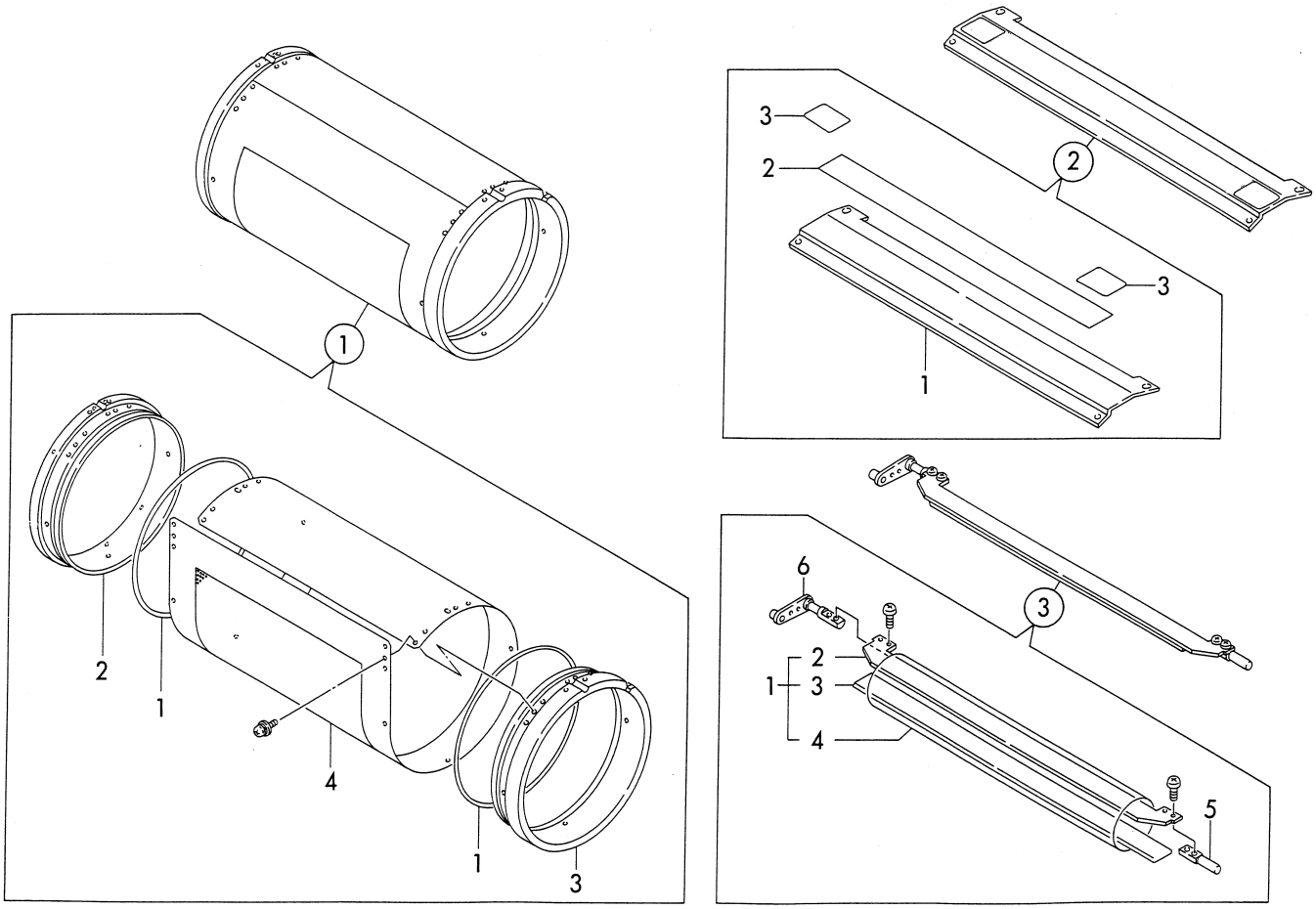

KEY No.	PARTS No.	DESCRIPTION	Q'TY	REMARKS
①	J3-S0002	Drum assy	1	
①-1	C9-11150	O-ring	2	
①-2	J3-A1020	Flange L	1	
①-3	J3-A1032	Flange R	1	
①-4	J3-A1222	Drum	1	
②	J3-S0003	Base assy	1	
②-1	NPN	Base	1	
②-2	NPN	Rubber sheet	1	
②-3	NPN	Tape	2	
③	J3-S0004	Clamp plate assy	1	
③-1	J3-A1080	Clamp plate unit	1	
③-2	NPN	Clamp plate	1	
③-3	NPN	Rubber magent	1	
③-4	NPN	Tube	1	
③-5	J3-A1120	Shaft	1	
③-6	J3-A1130	Lever unit	1	

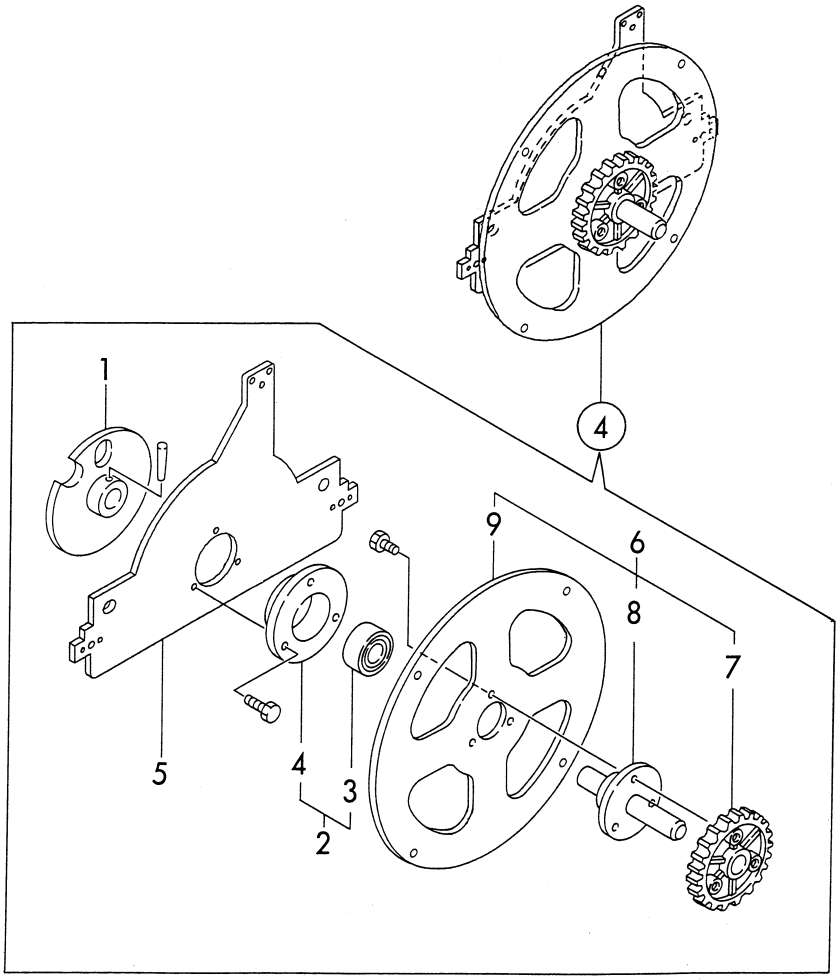

KEY No.	PARTS No.	DESCRIPTION	Q'TY	REMARKS
④	L1-A7010	Outer frame L assy	1	
④-1	NPN	Flange unit	1	
④-2	NPN	Holder unit	1	
④-3	NPN	Ball bearing	1	
④-4	NPN	Holder	1	
④-5	J3-A7081	Outer frame L	1	
④-6	NPN	Flange assy	1	
④-7	NPN	Gear	1	
④-8	NPN	Shaft	1	
④-9	NPN	Flange	1	

2. Drum Section II

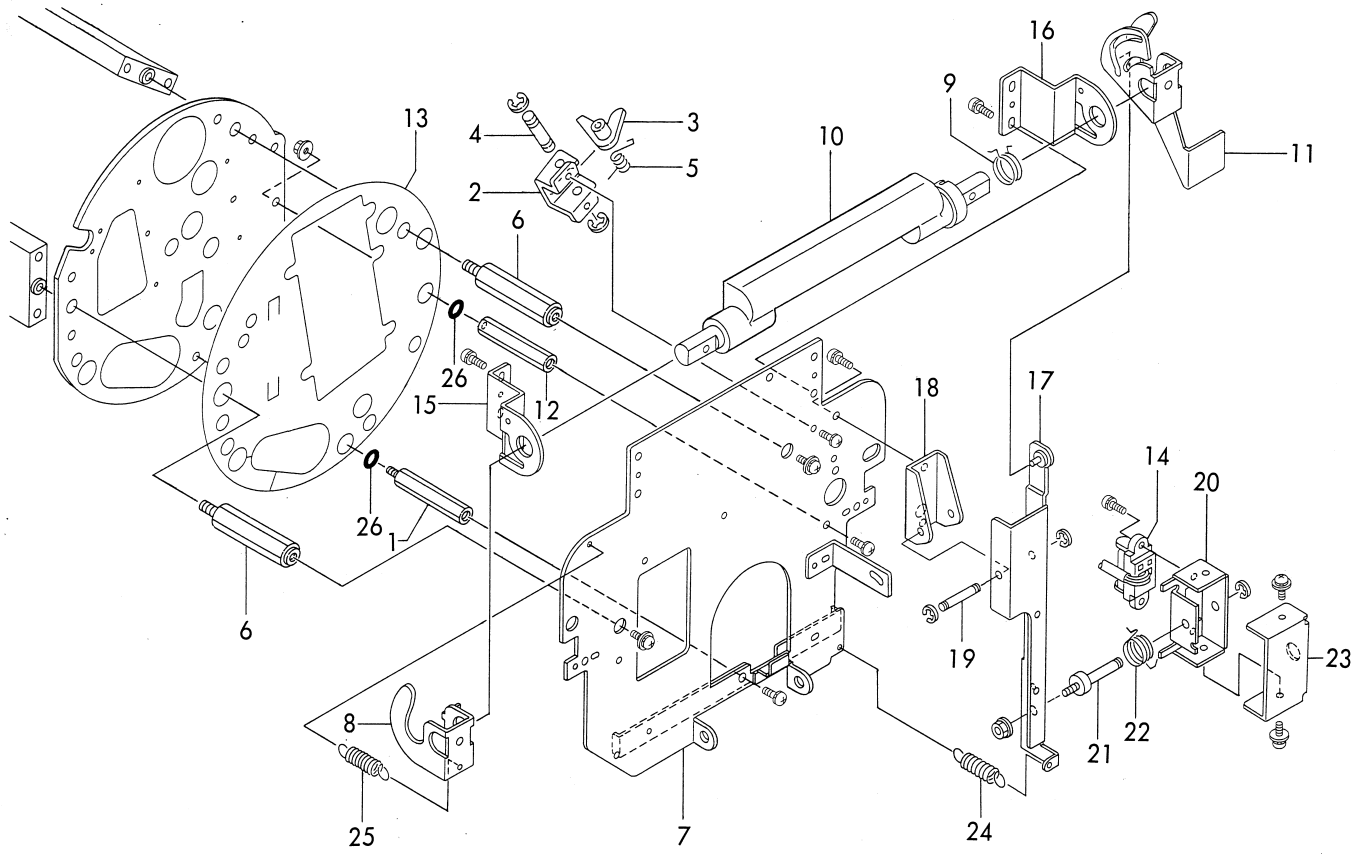

KEY No.	PARTS No.	DESCRIPTION	Q'TY	REMARKS
1	C9-12442	Pillar	1	
2	C9-12630	Bracket	1	
3	C9-12640	Stopper Unit	1	
4	C9-12670	Shaft	1	
5	C9-12681	Spring To	1	
6	J3-A6050	Pillar	2	
7	L1-A6011	Outer frame R assy	1	
8	L1-A6061	Cam	1	
9	L1-A6070	Reverse spring	1	
10	L1-A6080	Grip	1	
11	L1-A6091	Handle	1	
12	L1-A6100	Shaft	1	
13	L1-A6111	Cover	1	
14	L1-W1120	Drum relay cord 1	1	
15	L1-A6210	Angle R	1	
16	L1-A6220	Angle L	1	
17	L1-A6230	Lever unit	1	
18	L1-A6260	Bracket	1	
19	L1-A6270	Shaft	1	
20	J8-A6260	Bracket	1	
21	L1-A6290	Shaft	1	
22	L1-A6300	Spring To	1	
23	J8-A6270	Cover	1	
24	L1-A6320	Spring T	1	
25	L1-A6330	Spring T	1	
26	EA007	O-ring	2	

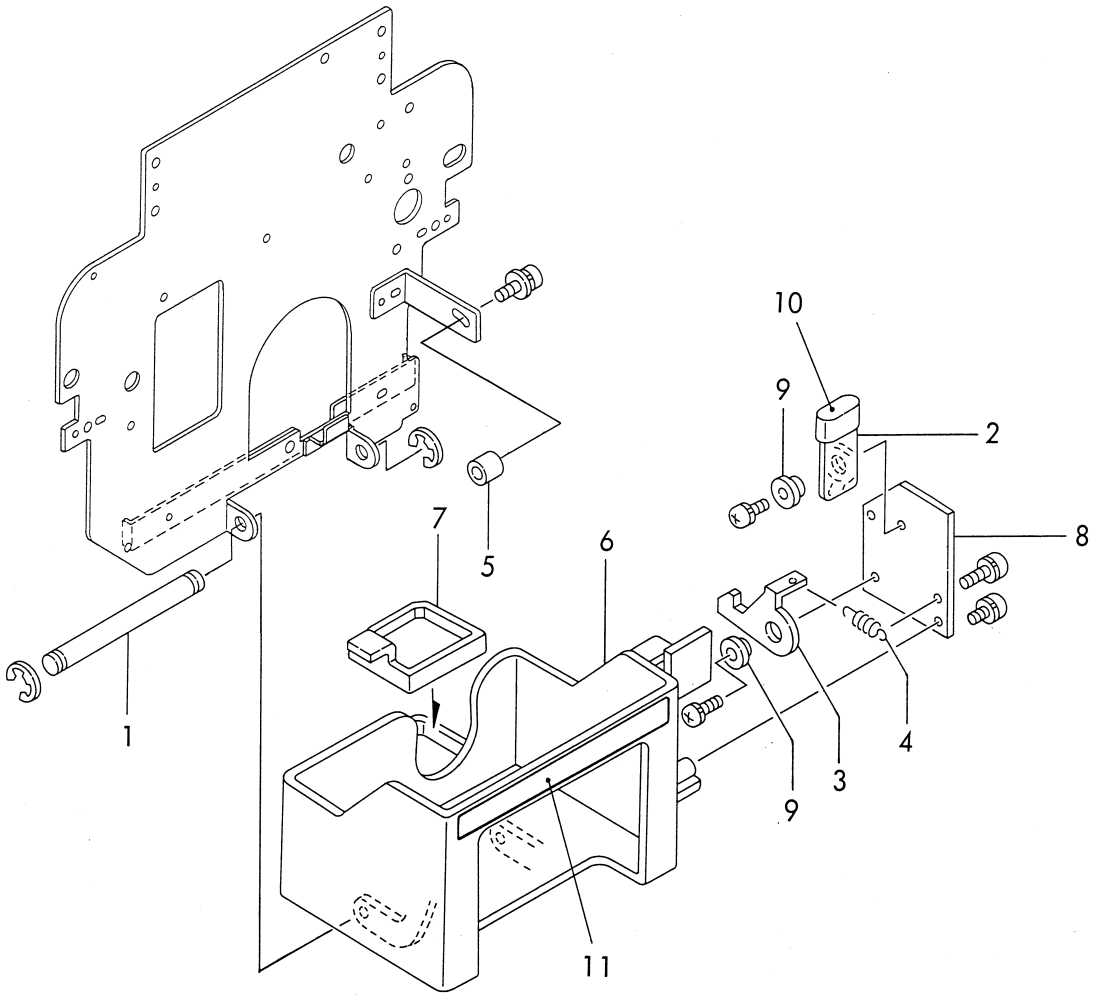

KEY No.	PARTS No.	DESCRIPTION	Q'TY	REMARKS
1	C9-12780	Shaft	1	
2	C9-12811	Lever	1	
3	C9-12820	Lock pawl	1	
4	C9-12830	Spring T	1	
5	C9-12860	Pillar	1	
6	E1-12722	Ink base	1	
7	E1-12740	Saucer	1	
8	E1-12790	Plate	1	
9	Z408022	Z collar	2	
10	DZ004	Cap	1	
11	E1-52580	Label,DRUM	1	D
	E1-79250	Label,DRUM	1	EA,EI

4. Drum Section IV

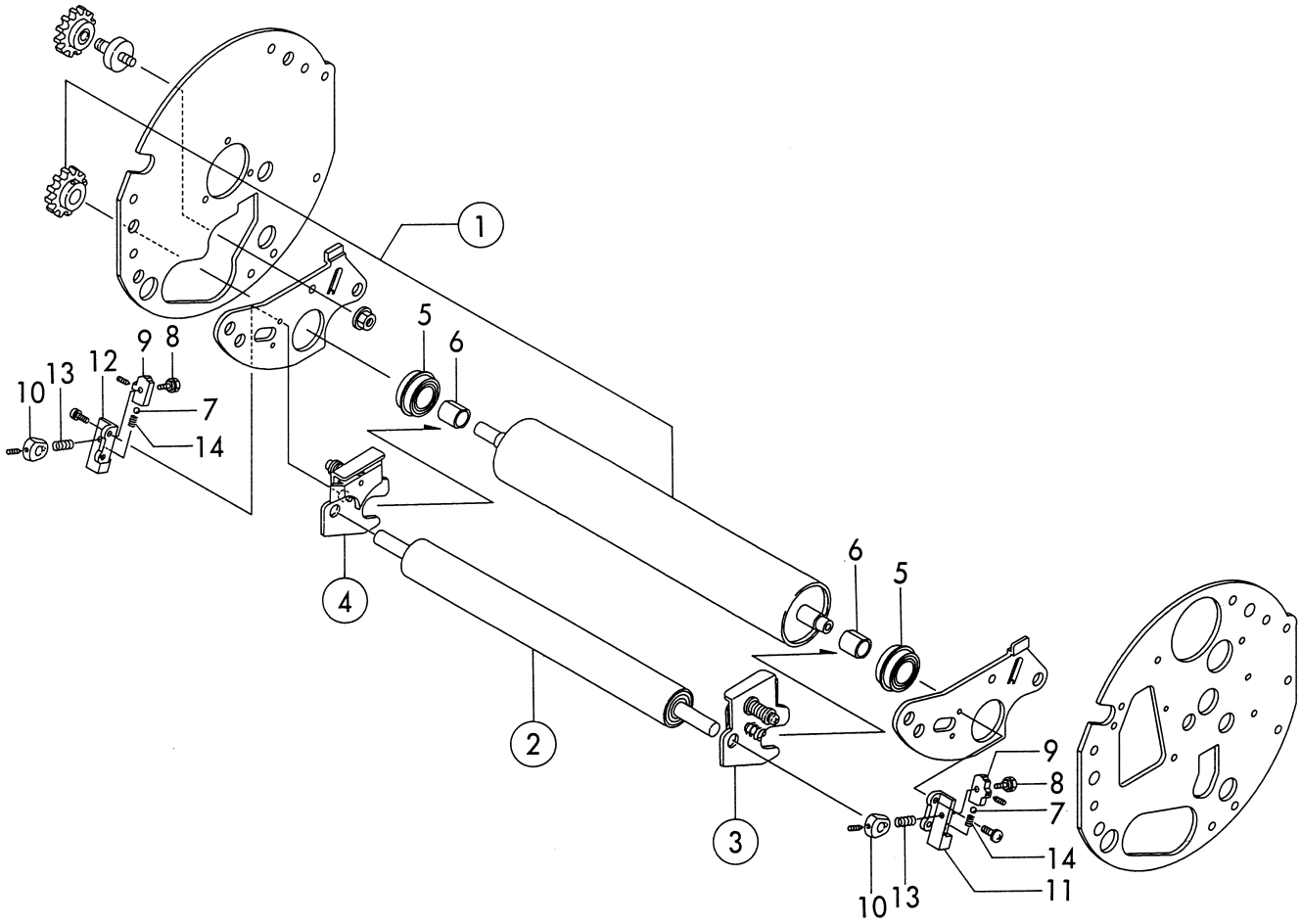

KEY No.	PARTS No.	DESCRIPTION	Q'TY	REMARKS
①	L1-A2010	Roller unit	1	
②	L1-A2030	Squeegee assy	1	
③	J3-S0062	Ink scraper R assy	1	
④	J3-S0063	Ink scraper L assy	1	
5	AA024	Ball bearing	2	
6	L1-A2050	Bush	2	
7	AA015	Steel ball	2	
8	C9-13421	Adjusting screw	2	
9	C9-13430	Ink adjusting screw	2	
10	F7-10700	Collar	2	
11	L1-A4120	Base R	1	
12	L1-A4130	Base L	1	
13	L1-A4140	Spring C	2	
14	C9-13440	Spring C	2	

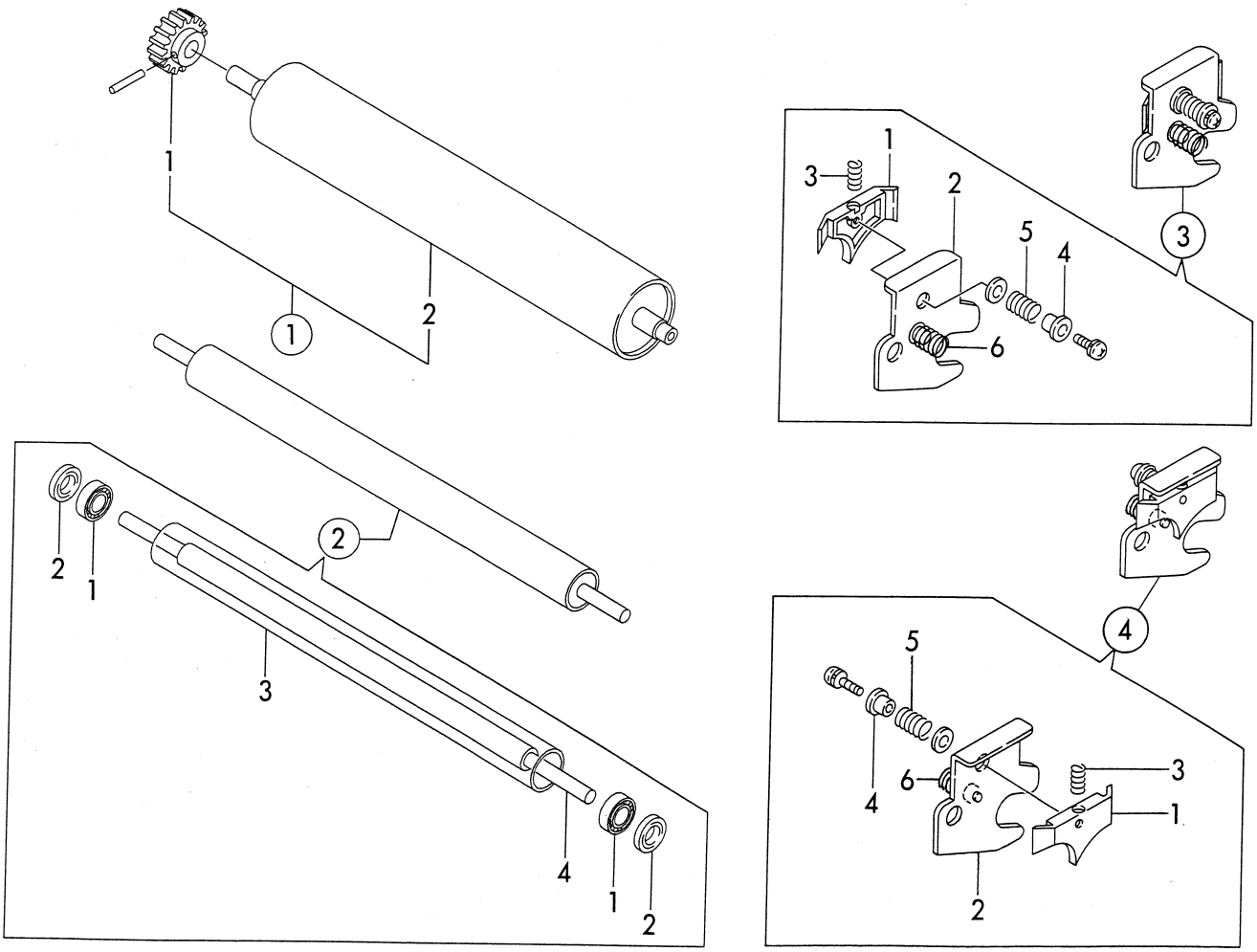

KEY No.	PARTS No.	DESCRIPTION	Q'TY	REMARKS
①	L1-A2010	Roller unit	1	
①-1	NPN	Gear	1	
①-2	NPN	Roller	1	
②	L1-A2030	Squeegee assy	1	
②-1	NPN	Ball bearing	2	
②-2	NPN	Oil seal	2	
②-3	NPN	Squeegee	1	
②-4	NPN	Shaft	1	
③	J3-S0062	Ink scraper R assy	1	
③-1	J3-A2410	Ink scraper R	1	
③-2	J3-A2430	Plate R unit	1	
③-3	J3-A2480	Spring C,1	1	
③-4	J3-A2490	Collar	1	
③-5	J3-A2500	Spring C,2	1	
③-6	J3-A2520	Spring C,4	1	
④	J3-S0063	Ink scraper L assy	1	
④-1	J3-A2420	Ink scraper L	1	
④-2	J3-A2460	Plate L unit	1	
④-3	J3-A2480	Spring C,1	1	
④-4	J3-A2490	Collar	1	
④-5	J3-A2500	Spring C,2	1	
④-6	J3-A2520	Spring C,4	1	

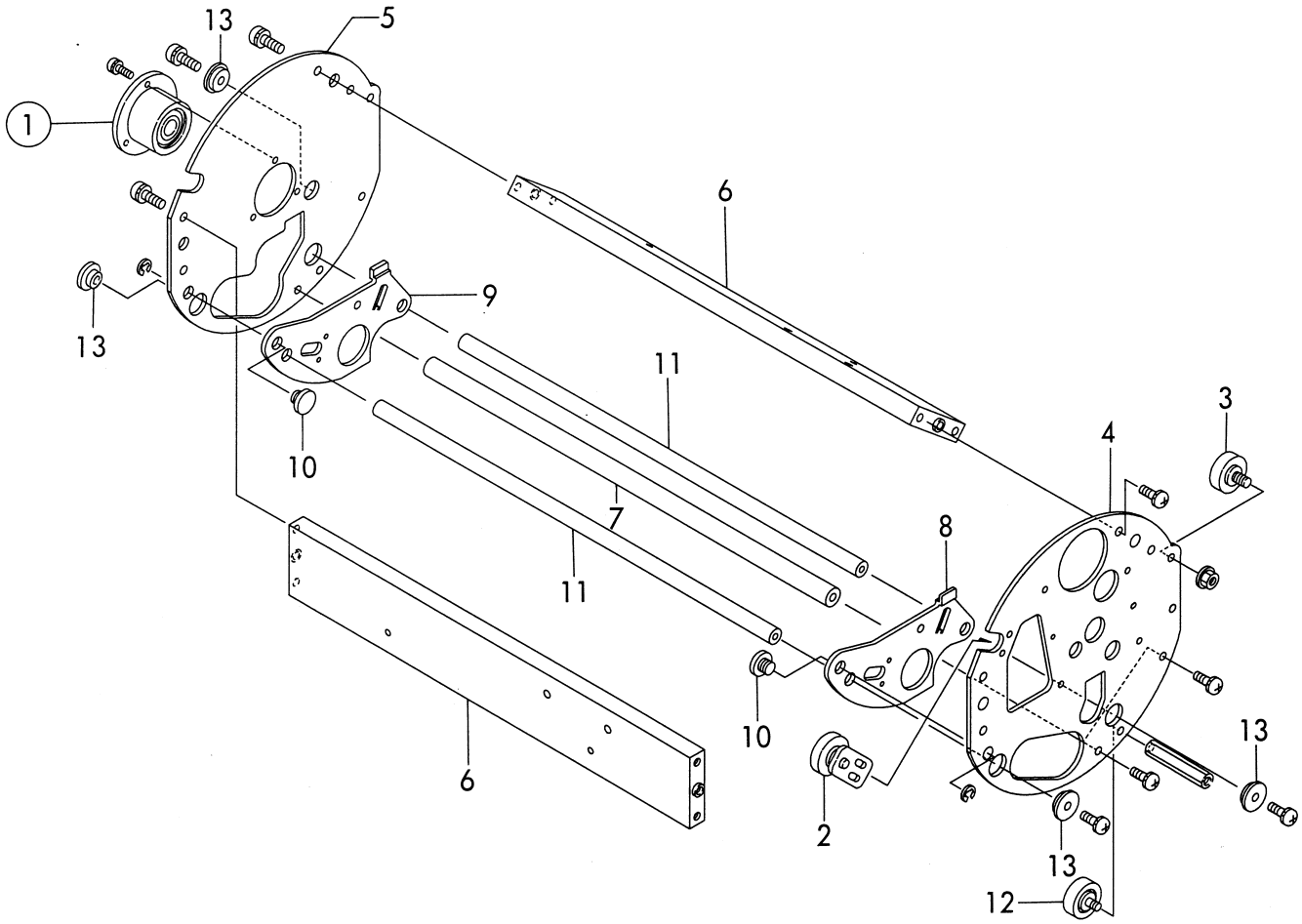

KEY No.	PARTS No.	DESCRIPTION	Q'TY	REMARKS
①	J3-A4010	Holder unit	1	
2	C9-11470	Prop plate unit	1	
3	C9-11780	Roller unit	1	
4	L1-A4010	Inner frame R	1	
5	L1-A4020	Inner frame L	1	
6	L1-A4030	Stay	2	
7	L1-A4040	Stay	2	
8	L1-A4050	Sub frame R	1	
9	L1-A4060	Sub frame L	1	
10	L1-A4070	Collar	2	
11	L1-A4080	Stay	2	
12	L1-A4090	Collar unit	1	
13	Z408022	Z collar	4	

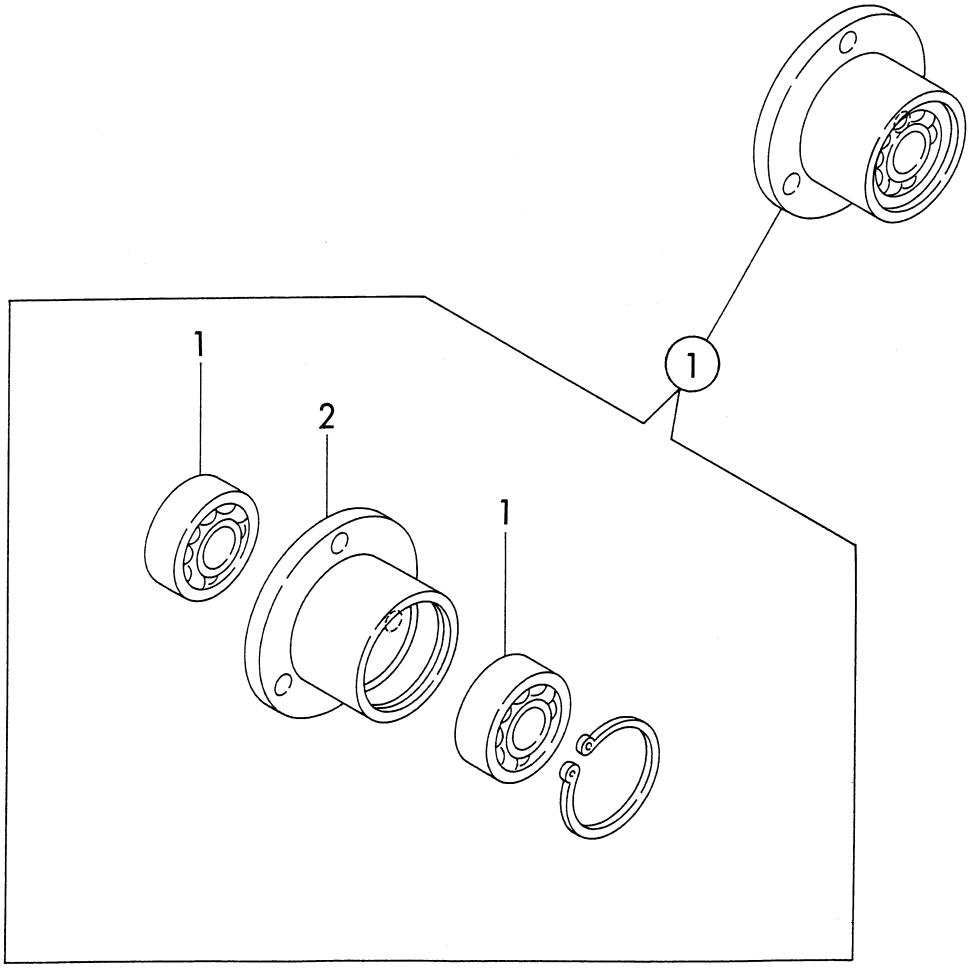

KEY No.	PARTS No.	DESCRIPTION	Q'TY	REMARKS
①	J3-A4010	Holder unit	1	
①-1	NPN	Ball bearing	2	
①-2	NPN	Holder	1	

6. Drum Section VI

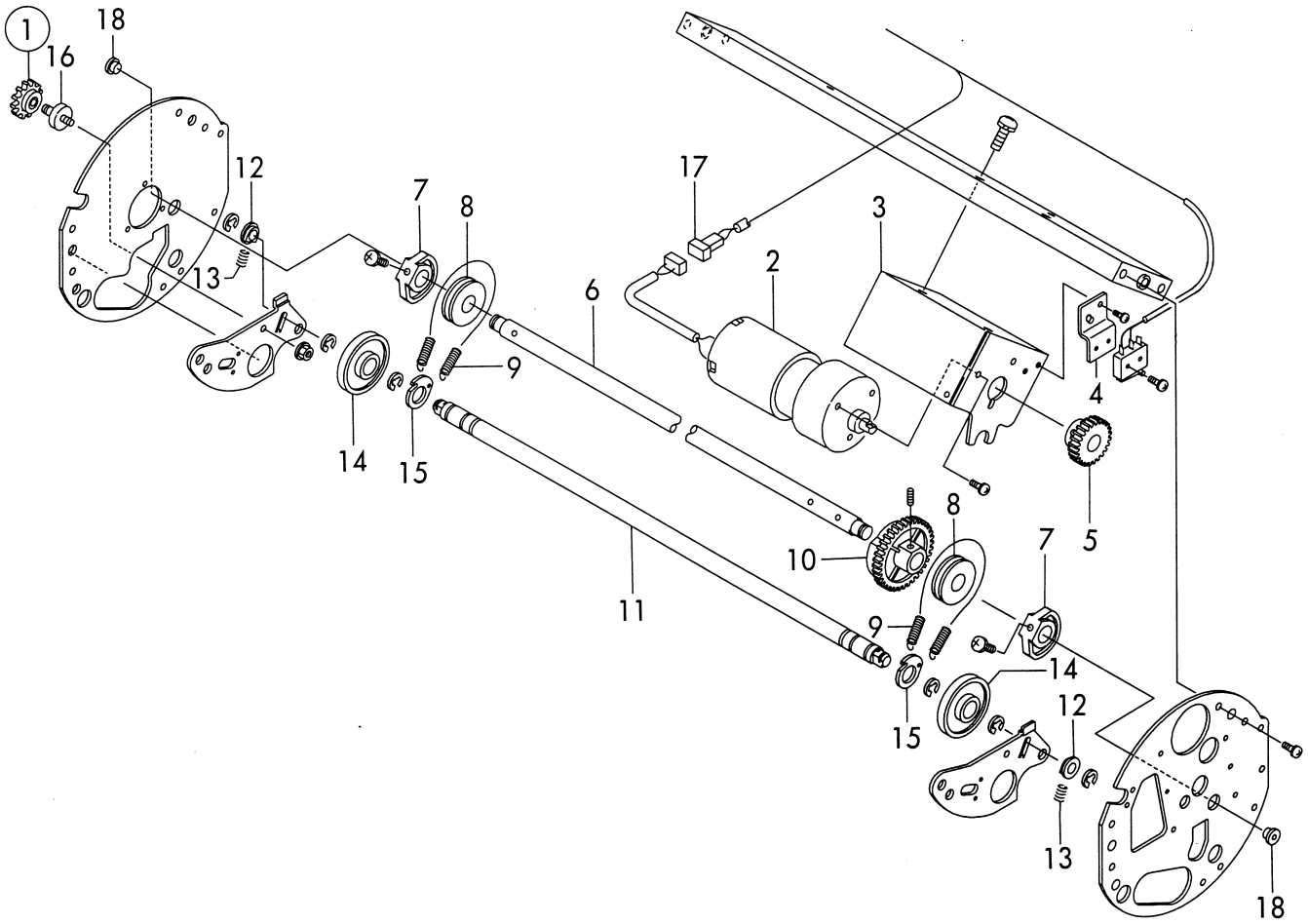

KEY No.	PARTS No.	DESCRIPTION	Q'TY	REMARKS
①	J3-A5010	Gear unit	1	
2	J8-X1130	Motor	1	
3	L1-A5010	Motor bracket	1	
4	L1-A5020	Switch bracket	1	
5	L1-A5030	Gear	1	
6	L1-A5040	Shaft	1	
7	L1-A5050	Cam	2	
8	L1-A5060	Collar	2	
9	L1-A5070	Spring T	2	
10	L1-A5080	Gear	1	
11	L1-A5090	Stay	1	
12	L1-A5100	Collar	2	
13	L1-A5110	Spring C	2	
14	L1-A5120	Collar	2	
15	L1-A5130	Plate	2	
16	L1-A5140	Shaft	1	
17	L1-W1130	Drum relay cord 2	1	
18	72-25310	Bush	2	

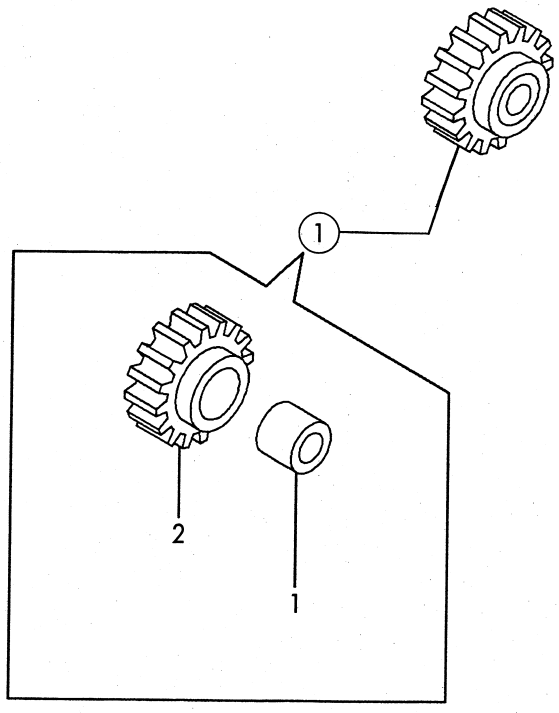

KEY No.	PARTS No.	DESCRIPTION	Q'TY	REMARKS
①	J3-A5010	Gear unit	1	
①-1	NPN	Bush	1	
①-2	NPN	Gear	1	

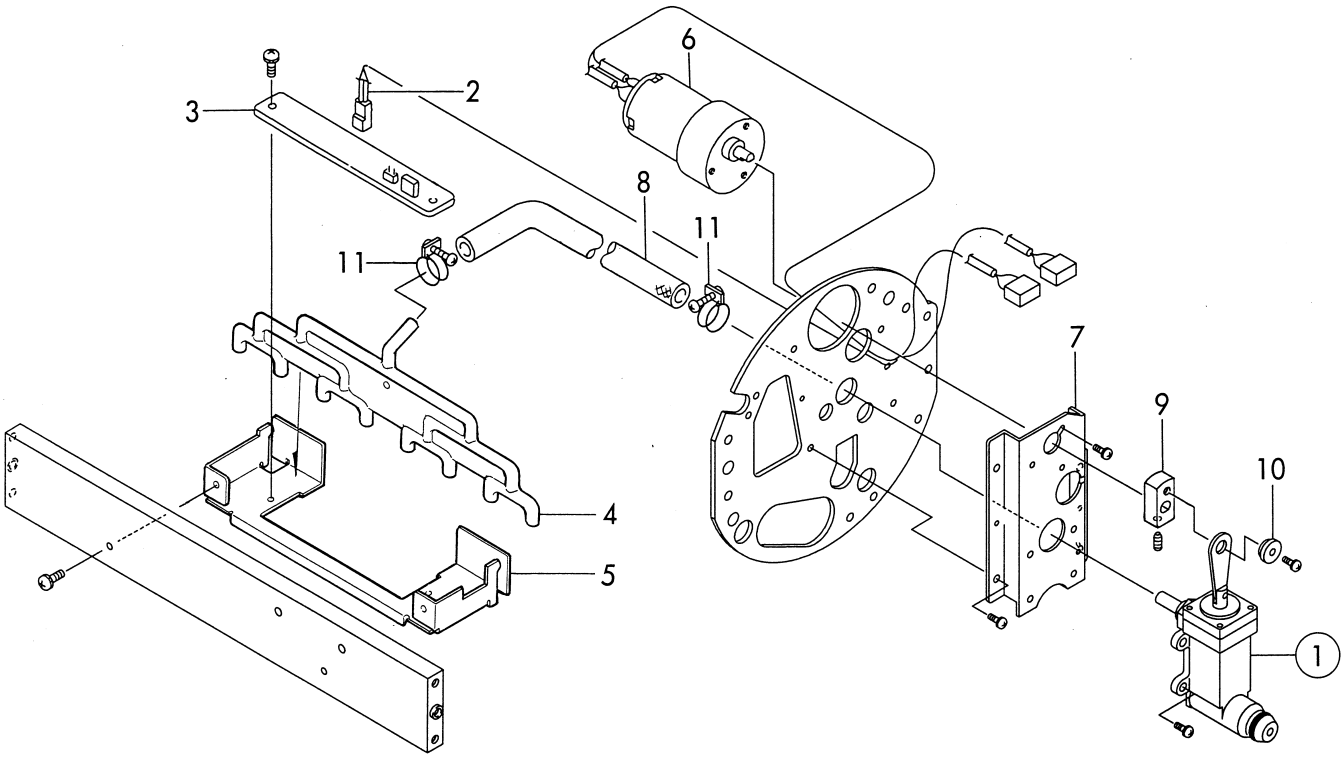

KEY No.	PARTS No.	DESCRIPTION	Q'TY	REMARKS
①	L1-A3010	Ink pump assy	1	
2	L1-W1100	Detecting cord unit	1	
3	F7-88800	Ink detecting PCB unit	1	
4	J3-A3080	Ink distributor	1	
5	J3-A3091	Bracket	1	
6	L1-X1070	Motor	1	
7	L1-A3160	Base	1	
8	J3-A3140	Hose	1	
9	L1-A3181	Collar	1	
10	Z408018	Z collar	1	
11	016-0053	Wire clump	2	

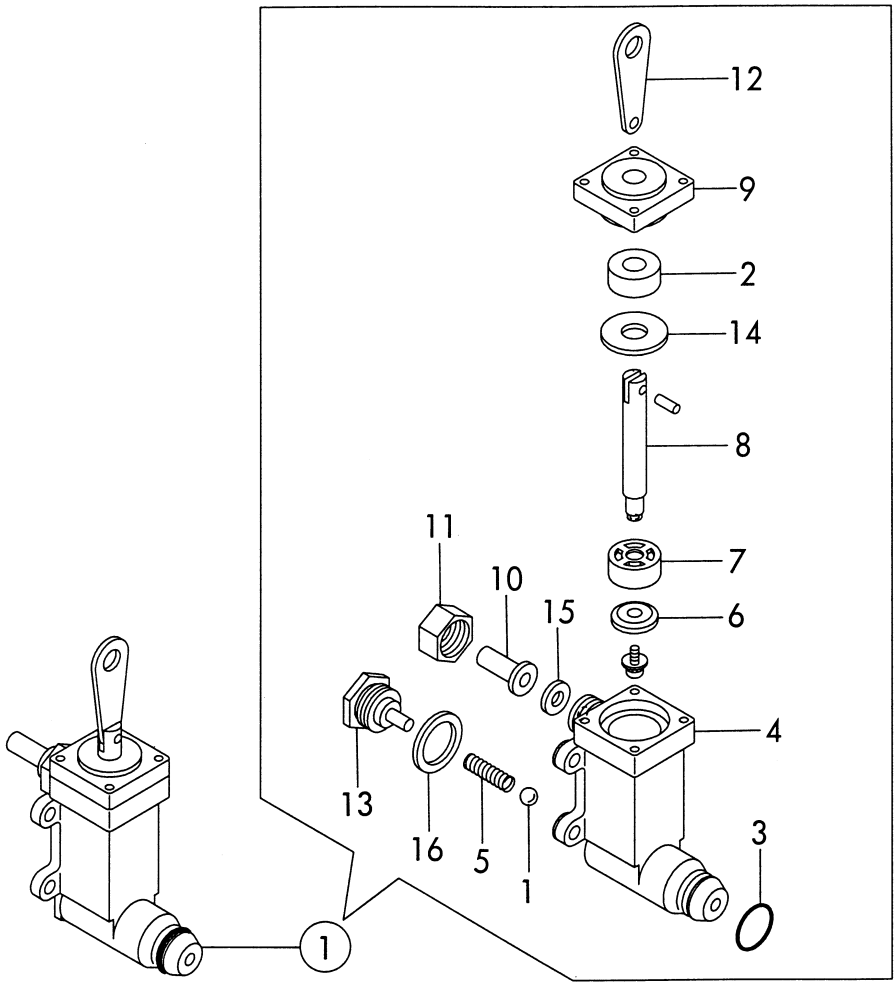

KEY No.	PARTS No.	DESCRIPTION	Q'TY	REMARKS
①	L1-A3010	Ink pump assy	1	
①-1	AA049	Steel ball	1	
①-2	EB001	Oil seal	1	
①-3	EA004	O-ring	1	
①-4	L1-A3020	Cylinder	1	
①-5	L1-A3030	Spring C	1	
①-6	L1-A3040	Valve	1	
①-7	L1-A3050	Plunger	1	
①-8	NPN	Valve shaft	1	
①-9	L1-A3070	Cover	1	
①-10	L1-A3080	Pipe	1	
①-11	L1-A3091	Nut	1	
①-12	NPN	Link	1	
①-13	L1-A3110	Plug	1	
①-14	L1-A3120	Packing	1	
①-15	L1-A3130	Packing	1	
①-16	L1-A3140	Packing	1	

8. Control Panel Section I

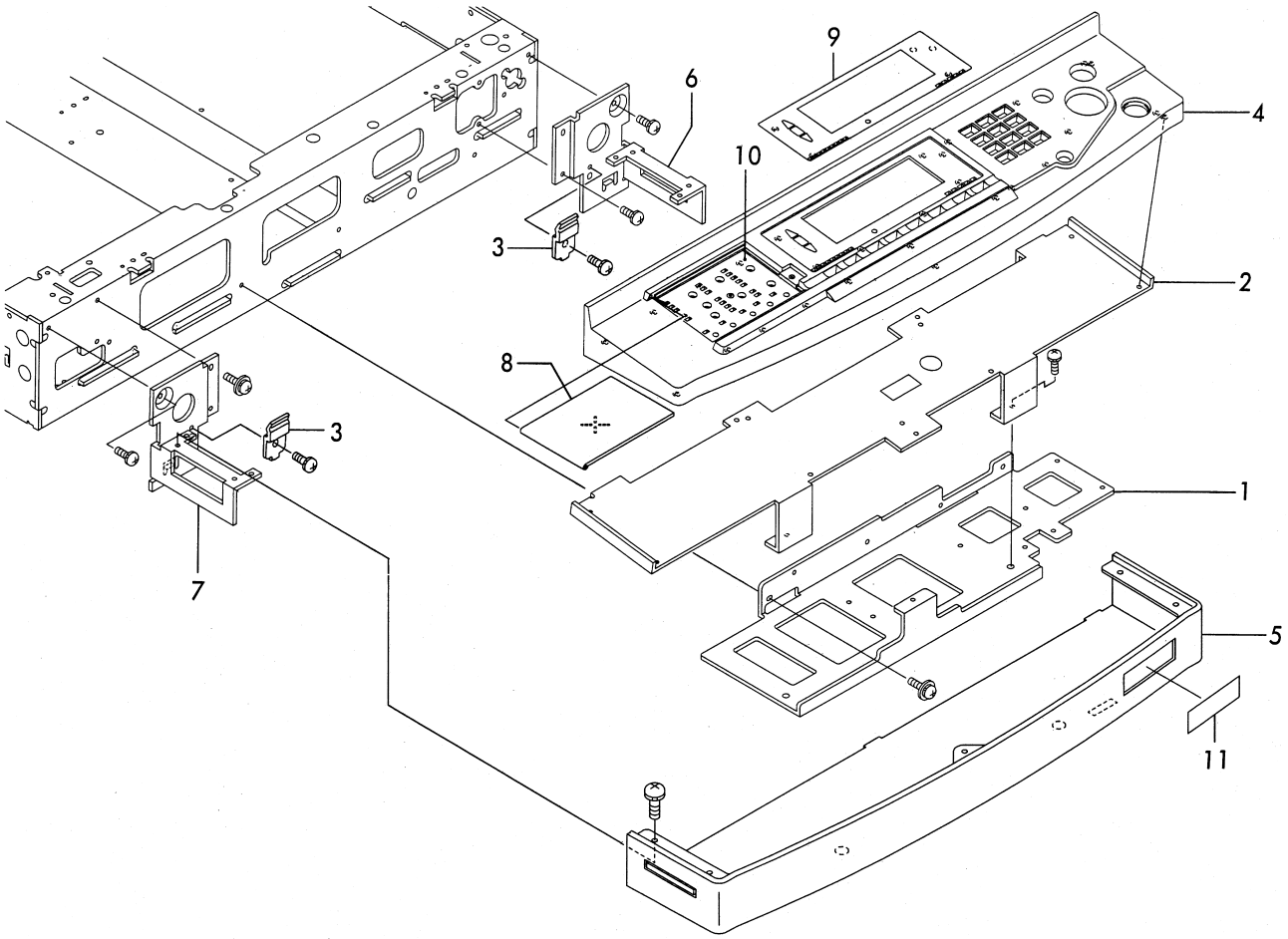

KEY No.	PARTS No.	DESCRIPTION	Q'TY	REMARKS
1	J2-G4030	Angle	1	
2	L1-K5061	Angle	1	
3	J3-K5070	Plate spring	2	
4	L1-K5010	Panel cover A	1	D
	L1-K5380	Panel cover A	1	EA,EI
5	L1-K5050	Panel cover B	1	
6	J2-G4010	Bracket R	1	
7	J2-G4020	Bracket L	1	
8	L1-K5340	Lid	1	
9	L1-T1010	Label,PANEL	1	D
	L1-T1290	Label,PANEL	1	EA,EI
10	L1-T1020	Label,PANEL	1	D
	L1-T1300	Label,PANEL	1	EA,EI
11	L1-T1360	Label,DP-63S	1	D,EA,EI

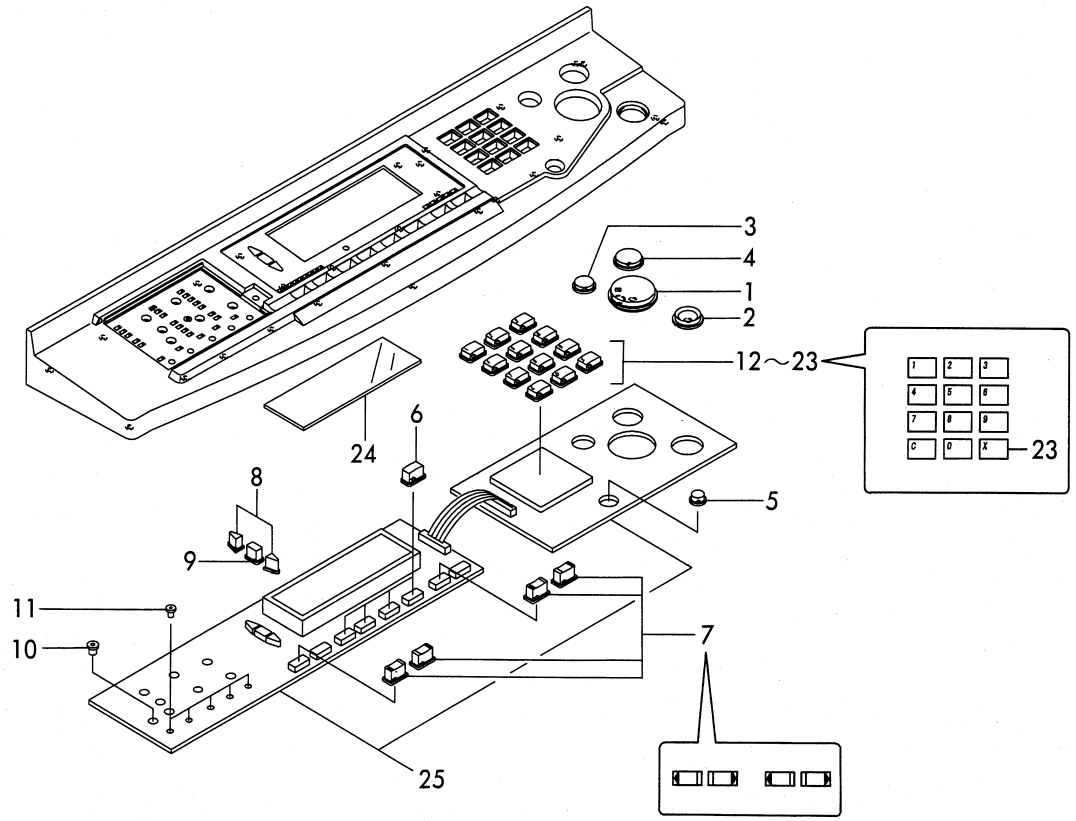

KEY No.	PARTS No.	DESCRIPTION	Q'TY	REMARKS
1	L1-K5100	Button	1	
2	L1-K5110	Button	1	
3	L1-K5120	Button	1	
4	L1-K5130	Button	1	
5	L1-K5140	Button	1	
6	L1-K5150	Button	4	
7	L1-K5160	Button	4	
8	L1-K5170	Button	2	
9	L1-K5180	Button	1	
10	L1-K5190	Button	8	
11	L1-K5200	Button	5	
12	L1-K5210	Button	1	
13	L1-K5220	Button	1	
14	L1-K5230	Button	1	
15	L1-K5240	Button	1	
16	L1-K5250	Button	1	
17	L1-K5260	Button	1	
18	L1-K5270	Button	1	
19	L1-K5280	Button	1	
20	L1-K5290	Button	1	
21	L1-K5300	Button	1	
22	L1-K5310	Button	1	
23	L1-K5320	Button	1	
24	L1-K5330	Plate	1	
25	L1-V3011	Control panel P.C.B. unit 1	1	

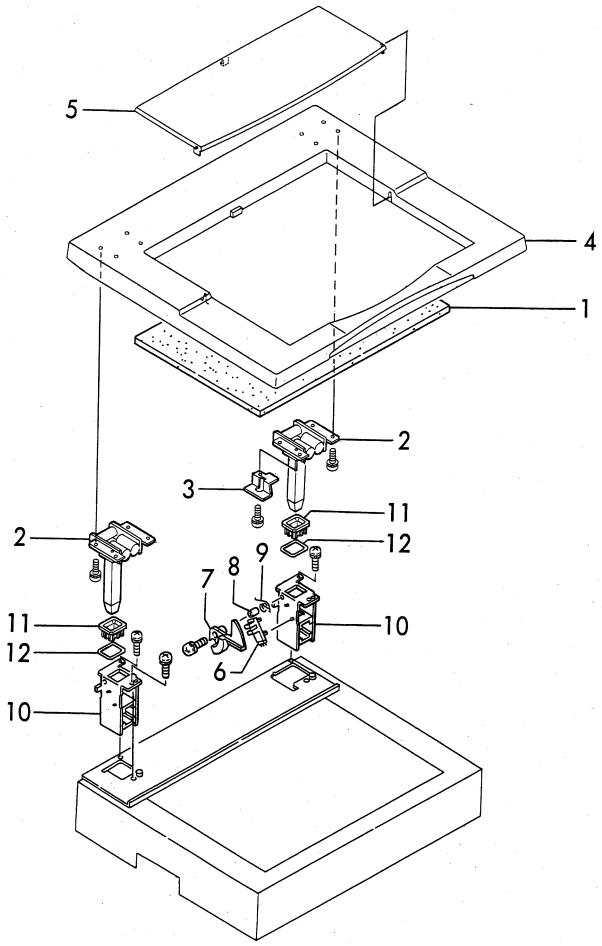

KEY No.	PARTS No.	DESCRIPTION	Q'TY	REMARKS
1	J2-A3060	Sponge sheet	1	
2	J2-A3080	Hinge assy	2	
3	J2-A3150	Angle	1	
4	L1-K6010	Document cover	1	
5	L1-K6020	Pocket cover	1	
6	CA003	Photo microsensor	1	
7	J2-C2050	Detecting stand	1	
8	J2-C2060	Boss	1	
9	J2-C2071	Spring To	1	
10	J2-C2210	Bracket unit	2	
11	J2-C2230	Holder	2	
12	J2-H1150	Plate	2	

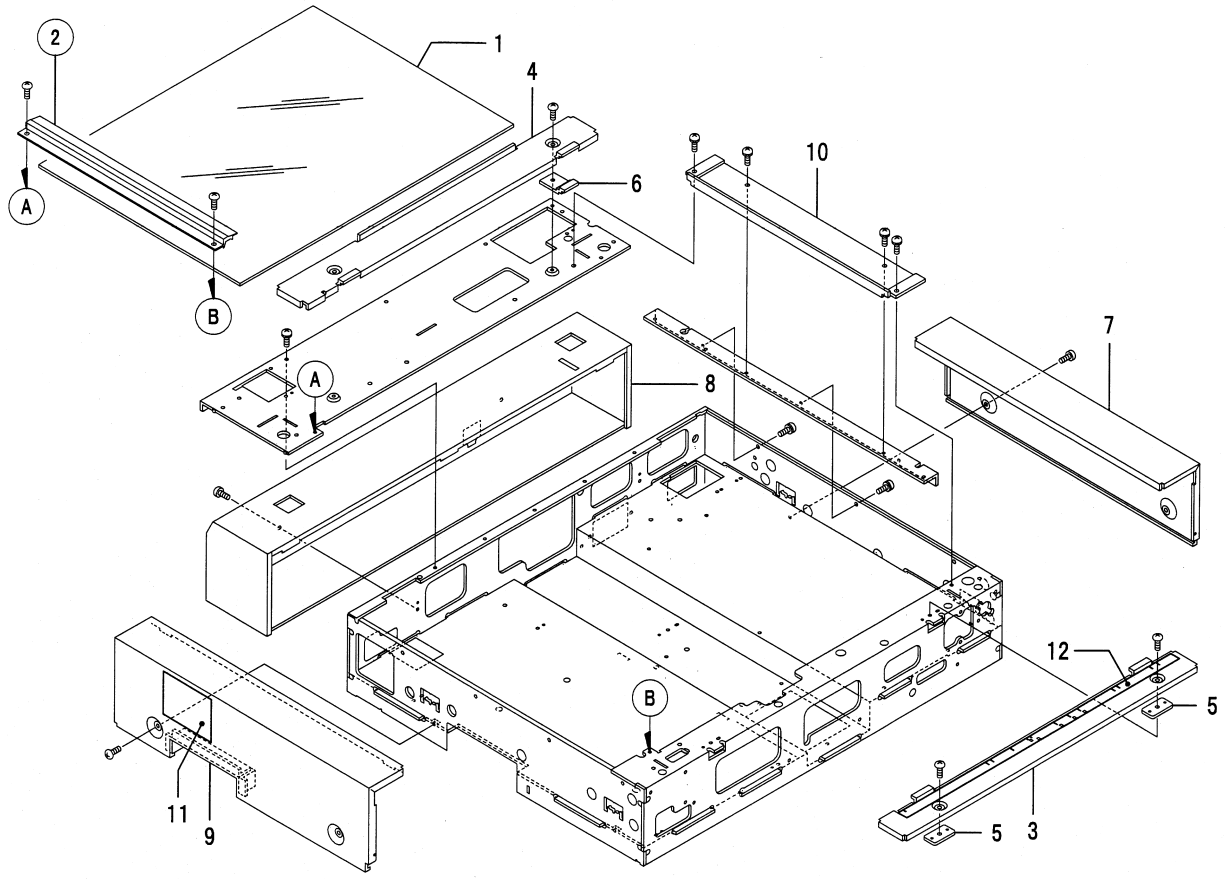

KEY No.	PARTS No.	DESCRIPTION	Q'TY	REMARKS
1	J2-A2080	Glass	1	
②	J2-A2160	Scale plate	1	D,EA
②	J2-A2180	Scale plate	1	EI
3	J2-A1101	Cover D	1	
4	J2-A1111	Cover E	1	
5	J2-A1130	Spacer	2	
6	J2-A1150	Angle	1	
7	J2-G1010	Cover A	1	
8	J2-G1020	Cover B unit	1	
9	J2-G1060	Cover C unit	1	
10	J2-G1080	Cover F	1	
11	J3-T1100	Label,PUSH(TOP COVER)	1	D,EA,EI
12	L1-T1050	Label,SIZE(HORIZONTAL)	1	D,EA
	L1-T4020	Label,SIZE(HORIZONTAL)	1	EI

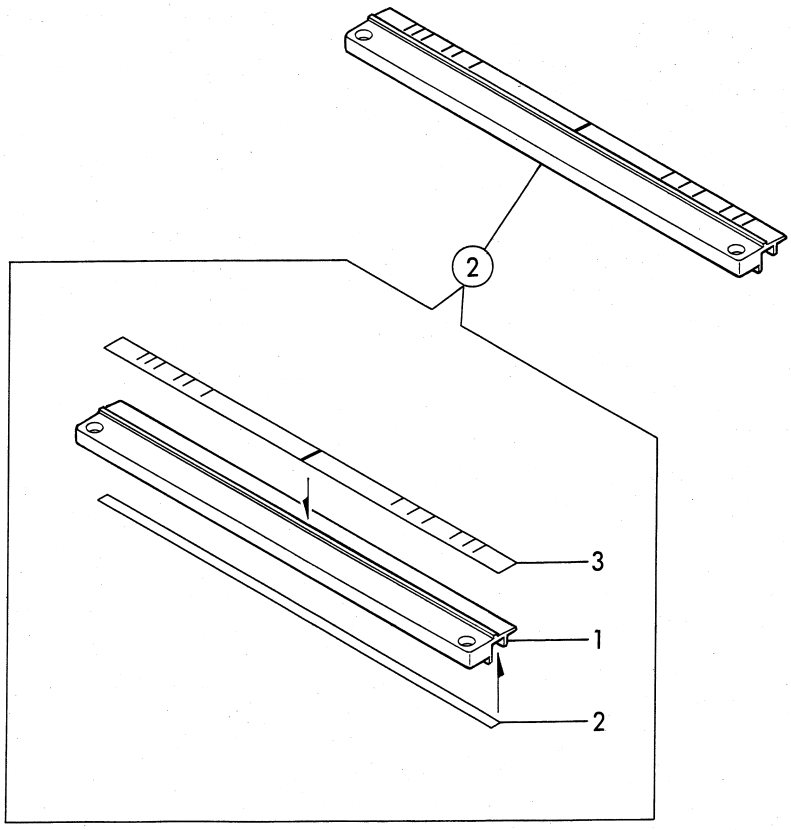

KEY No.	PARTS No.	DESCRIPTION	Q'TY	REMARKS
②	J2-A2160	Scale plate	1	D,EA
②-1	J2-A2021	Scale plate	1	
②-2	J2-A2170	Tape	1	
②-3	L1-T1040	Label,SIZE(VERTICAL)	1	D,EA
②	J2-A2180	Scale plate	1	EI
②-1	J2-A2021	Scale plate	1	
②-2	J2-A2170	Tape	1	
②-3	L1-T4010	Label,SIZE(VERTICAL)	1	EI

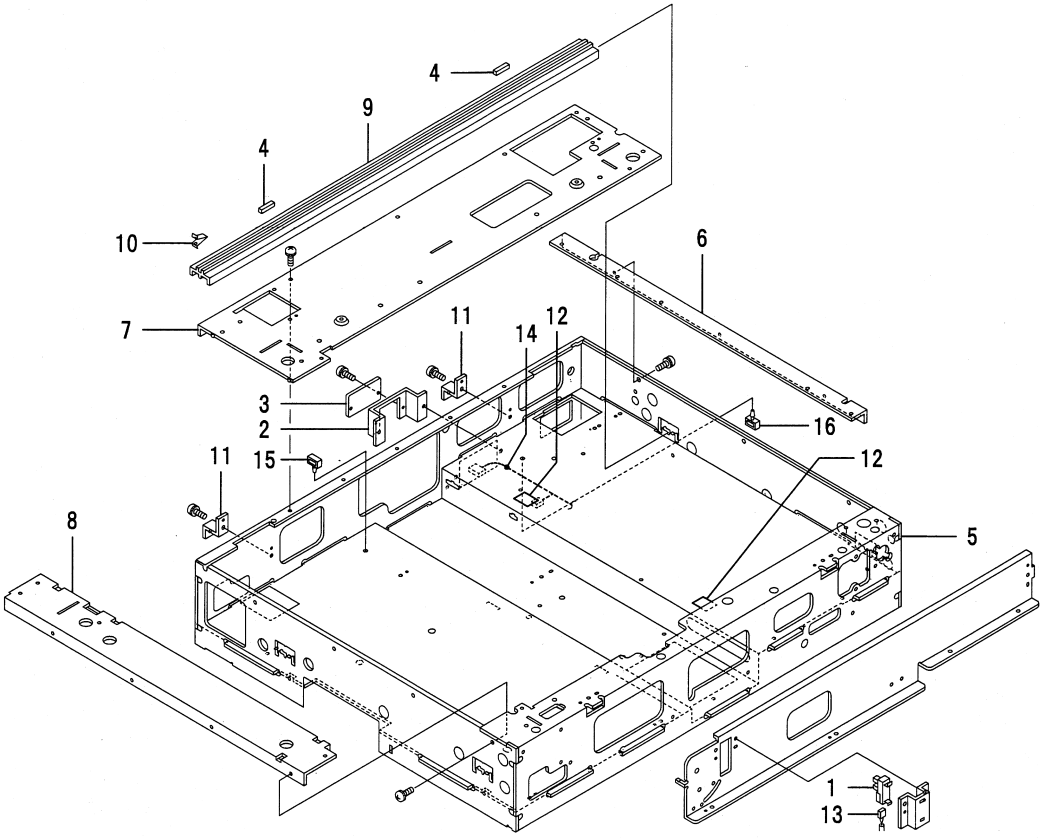

KEY No.	PARTS No.	DESCRIPTION	Q'TY	REMARKS
1	CA003	Photo microsensor	1	
2	J2-B1122	Bracket	1	
3	J2-B1131	Cover	1	
4	J2-B1181	Sheet	4	
5	J2-H1011	Frame unit	1	
6	J2-H1080	Reinforcing frame A	1	
7	J2-H1091	Reinforcing frame B	1	
8	J2-H1100	Reinforcing frame C	1	
9	J2-H1120	Rail	2	
10	J2-H1130	Plate spring	4	
11	J2-H1140	Angle	2	
12	J2-H1160	Sheet	2	
13	J3-W1070	Position sensor cord unit	1	
14	L1-W1140	Scanner relay cord unit	1	
15	XC010	Clamp	1	
16	XC017	Clamp	1	

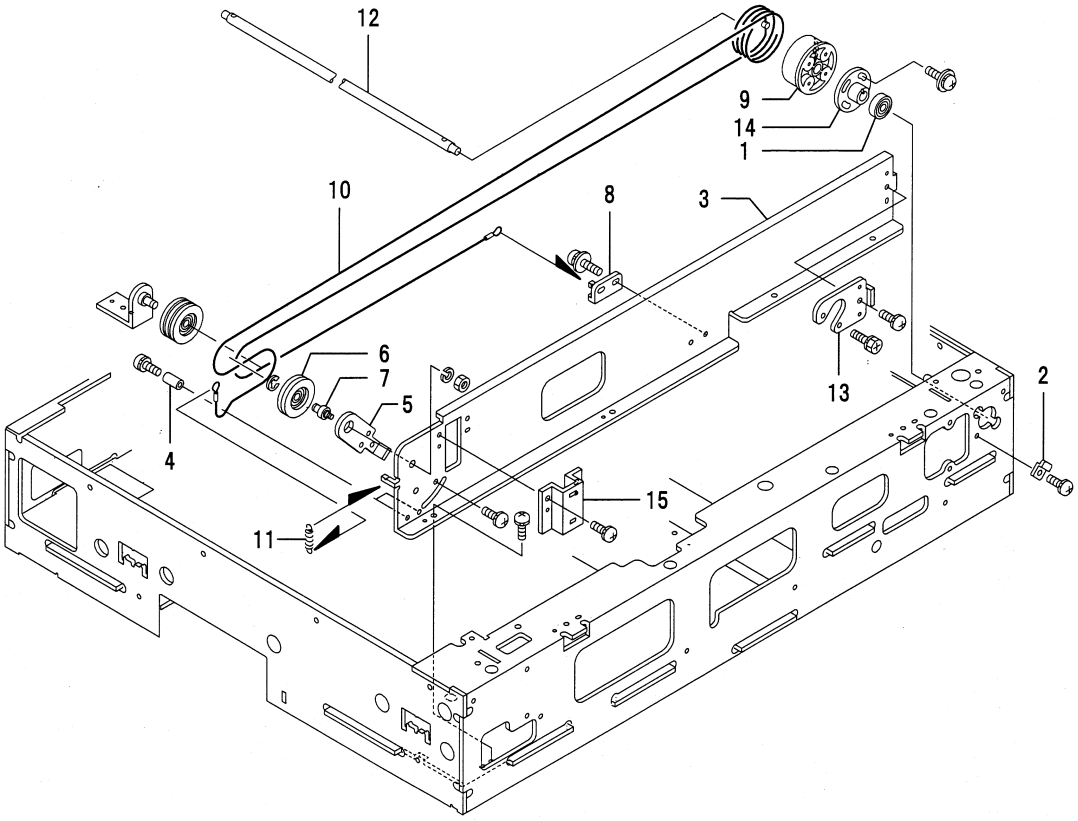

KEY No.	PARTS No.	DESCRIPTION	Q'TY	REMARKS
1	AA008	Ball bearing	1	
2	C6-53650	Angle	1	
3	J2-J1010	Sub frame F	1	
4	J2-J1020	Pin	2	
5	J2-J1030	Angle	1	
6	J2-J1040	Pulley unit	1	
7	J2-J1060	Pin	1	
8	J2-J1070	Angle	1	
9	J2-J1080	Pulley B	1	
10	J2-J1091	Wire	1	
11	J2-J1100	Spring T	1	
12	J2-J1110	Shaft	1	
13	J2-J1120	Bracket	1	
14	J2-J1130	Adjuster	1	
15	J2-J1140	Sensor bracket	1	

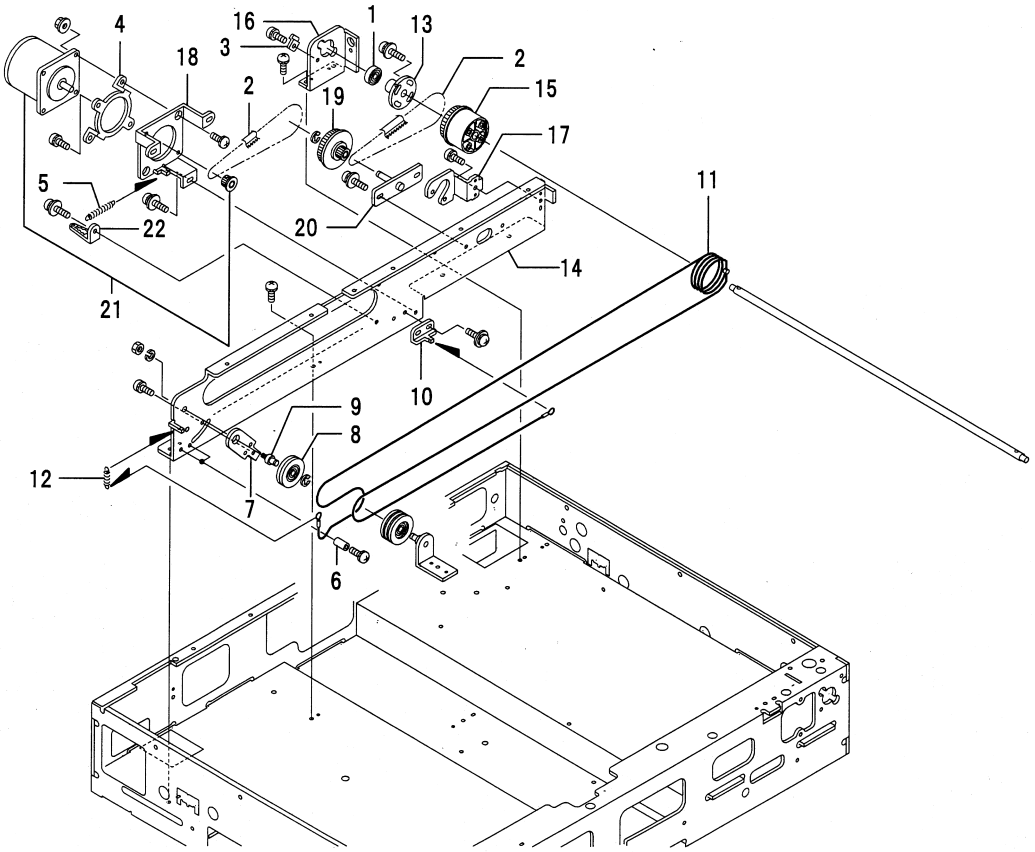

KEY No.	PARTS No.	DESCRIPTION	Q'TY	REMARKS
1	AA008	Ball bearing	1	
2	AJ017	Timing belt	2	
3	C6-53650	Angle	1	
4	F7-21210	Spacer	1	
5	J2-C1100	Spring	1	
6	J2-J1020	Pin	2	
7	J2-J1030	Angle	1	
8	J2-J1040	Pulley unit	1	
9	J2-J1060	Pin	1	
10	J2-J1070	Angle	1	
11	J2-J1090	Wire	1	
12	J2-J1100	Spring T	1	
13	J2-J1130	Adjuster	1	
14	J2-J2010	Sub frame R	1	
15	J2-J2020	Pulley C	1	
16	J2-J2031	Bracket	1	
17	J2-J2040	Bracket	1	
18	J2-J2050	Motor bracket	1	
19	J2-J2060	Pulley unit	1	
20	J2-J2080	Idler pin unit	1	
21	J2-X1010	Stepping motor	1	
22	52-14380	Angle	1	

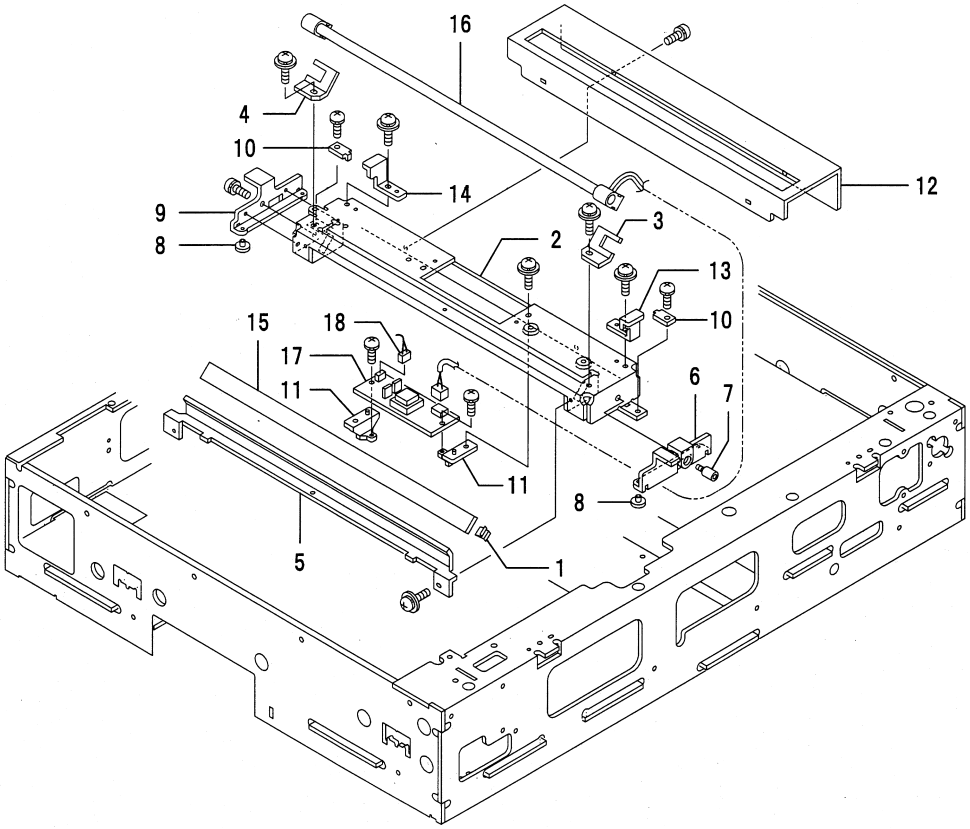

KEY No.	PARTS No.	DESCRIPTION	Q'TY	REMARKS
1	F7-20840	Plate spring	2	
2	J2-L1010	Slidar A unit	1	
3	J2-L1050	Lamp base F	1	
4	J2-L1060	Lamp base R	1	
5	J2-L1070	Reflecting plate	1	
6	J2-L1080	Slide bracket F	1	
7	J2-L1090	Pin	1	
8	J2-L1100	Slidar	4	
9	J2-L1110	Slide bracket R	1	
10	J2-L1120	Angle	2	
11	J2-L1130	Angle	2	
12	J2-L1141	Cover	1	
13	J2-L1151	Stopper F•@	1	
14	J2-L1161	Stopper R•@	1	
15	J2-L1170	Mirror	1	
16	J2-X1040	Lamp assy	1	
17	J2-X1050	Inverter assy	1	
18	J3-W1080	Lamp cord unit	1	

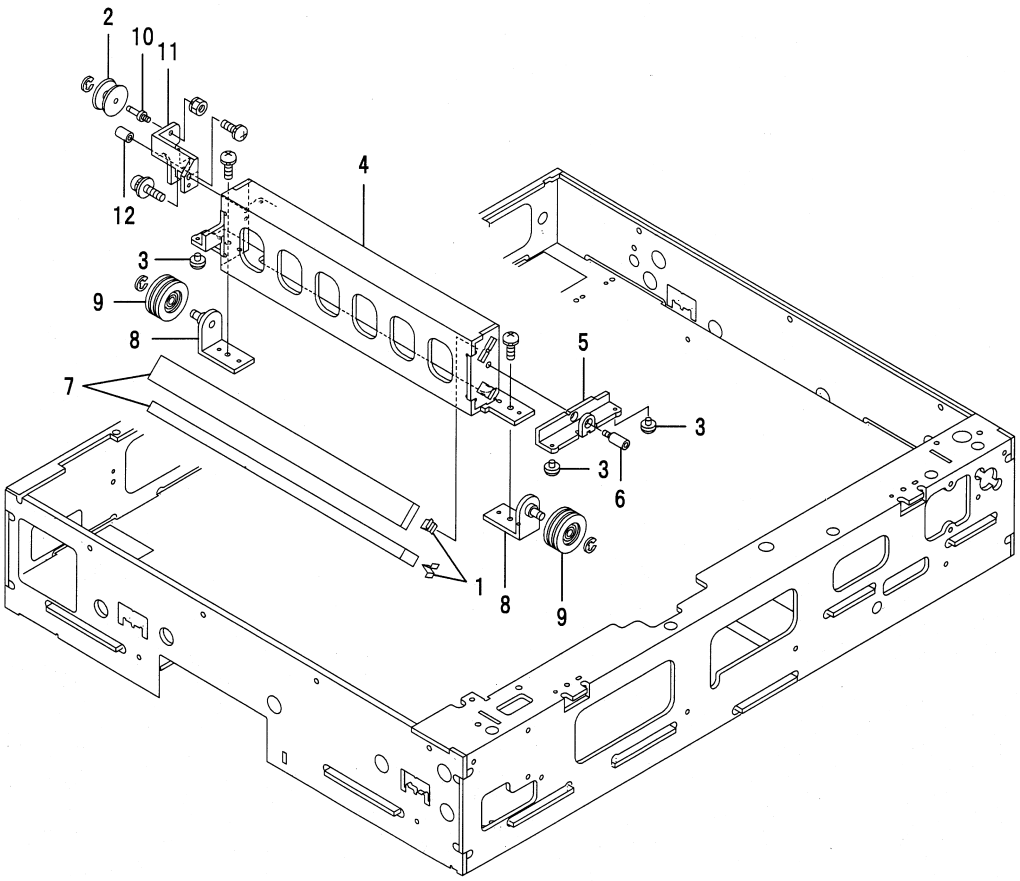

KEY No.	PARTS No.	DESCRIPTION	Q'TY	REMARKS
1	F7-20840	Plate spring	4	
2	J2-E1170	Roller	1	
3	J2-L1100	Slidar	4	
4	J2-M1010	Slidar B unit	1	
5	J2-M1050	Slide bracket	1	
6	J2-M1060	Pin	1	
7	J2-M1070	Mirror	2	
8	J2-M1080	Idler pin unit	2	
9	J2-M1110	Pulley unit	2	
10	J2-M1130	Idler pin	1	
11	J2-M1140	Bracket	1	
12	J2-M1150	Pin	1	

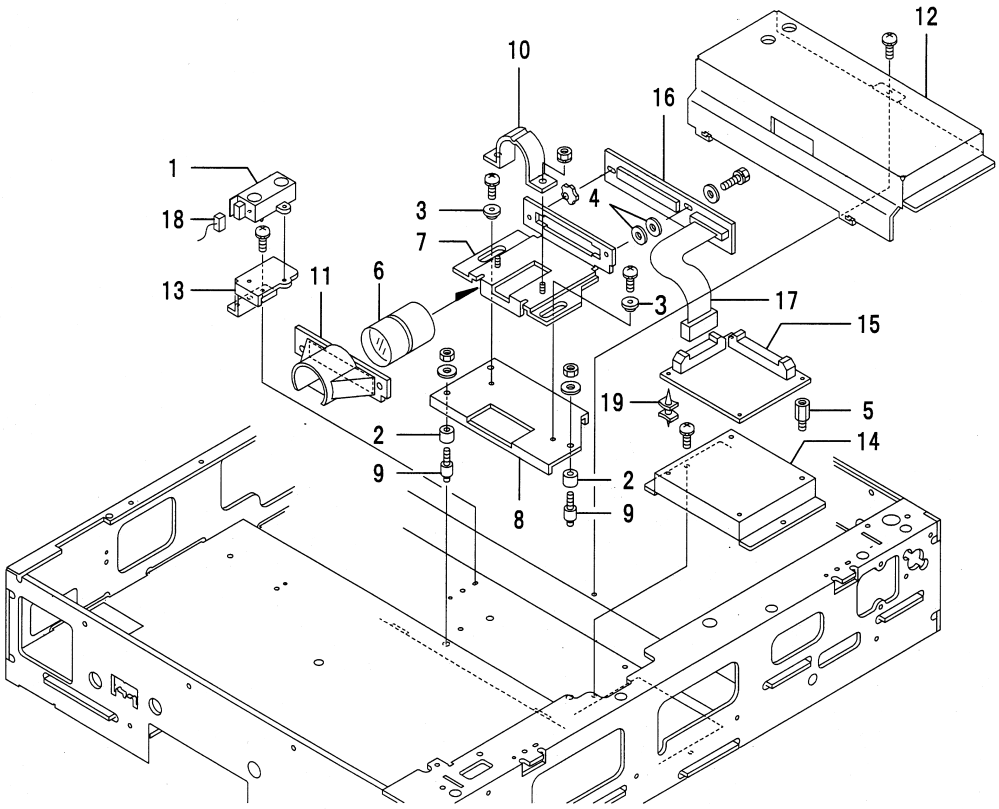

KEY No.	PARTS No.	DESCRIPTION	Q'TY	REMARKS
1	CA018	Manuscript sensor	1	
2	J2-F1030	Rubber plate	3	
3	J2-F1051	Collar	2	
4	J2-F1070	Spacer	2	
5	J2-F1111	Spacer	2	
6	J2-F1150	Lens	1	
7	J2-N1010	Lens stand	1	
8	J2-N1020	Base	1	
9	J2-N1030	Shaft	3	
10	J2-N1040	Saddle	1	
11	J2-N1050	Lens cover	1	
12	J2-N1060	Cover	1	
13	J2-N1070	Sensor bracket	1	
14	J2-N1080	Base	1	
15	J3-V3030	A/D P.C.B unit	1	
16	J3-V3361	CCD P.C.B unit	1	
17	J3-W1060	A/D cord unit	1	
18	L1-W1170	Document sensor relay cord	1	
19	XB011	Spacer	2	

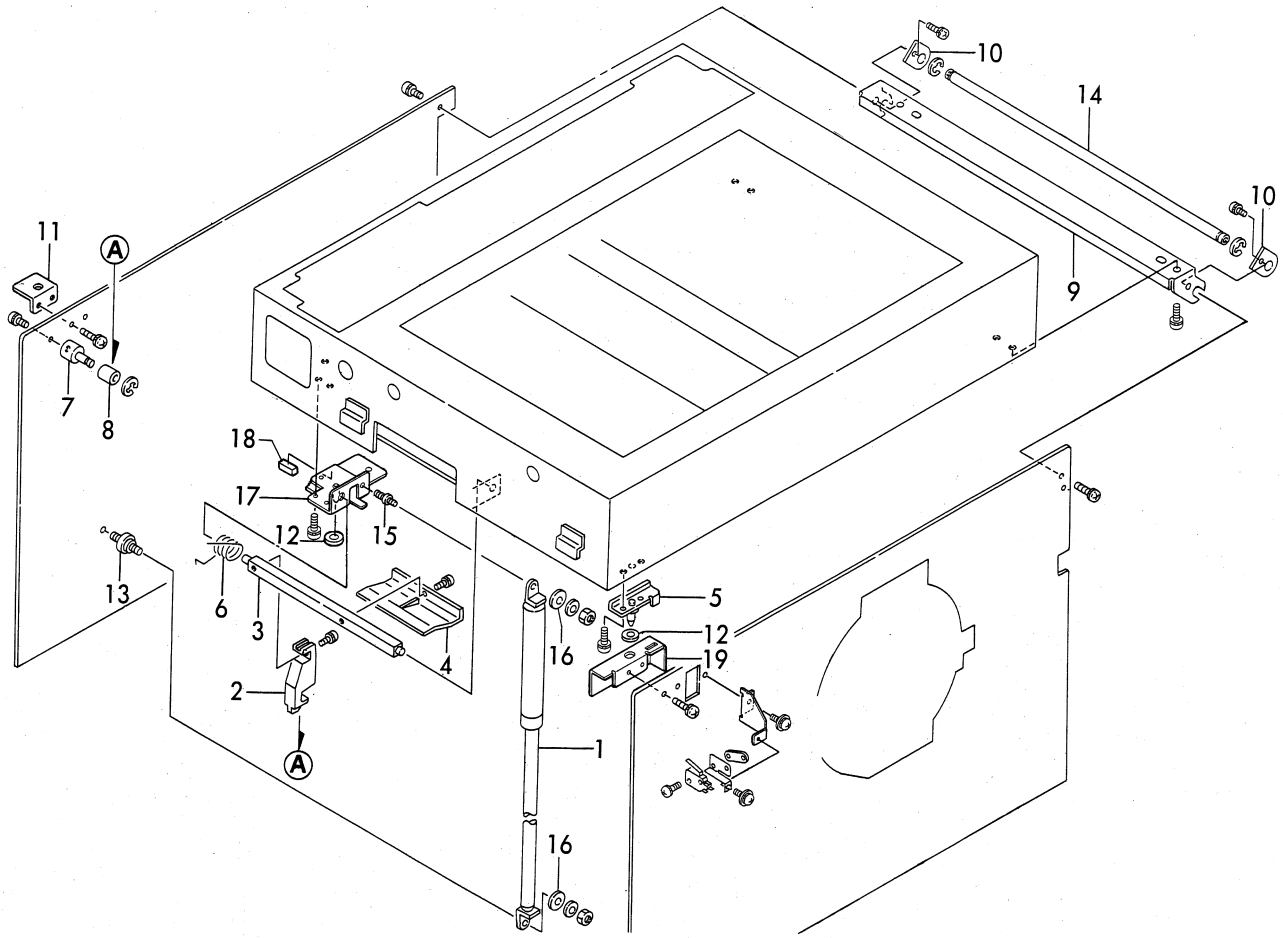

KEY No.	PARTS No.	DESCRIPTION	Q'TY	REMARKS
1	DA060	Damper	1	
2	J2-B2013	Lock lever	1	
3	J2-B2020	Shaft	1	
4	J2-B2031	Release lever	1	
5	J2-B2260	Bracket unit	1	
6	J2-B2073	Spring To L	1	
7	J2-B2081	Shaft	1	
8	J2-B2091	Collar	1	
9	J2-B2310	Bracket	1	
10	J2-B2120	Stopper	2	
11	J2-B2280	Bracket	1	
12	J2-B2141	Rubber cushion	2	
13	J2-B2161	Pillar	1	
14	J2-B2180	Stay	1	
15	J2-B2200	Pillar	1	
16	J2-B2210	Washer	2	
17	J2-B2290	Bracket unit	1	
18	J3-K1160	Sponge	1	
19	L1-K1570	Bracket	1	

19. Feed Ejection Section I

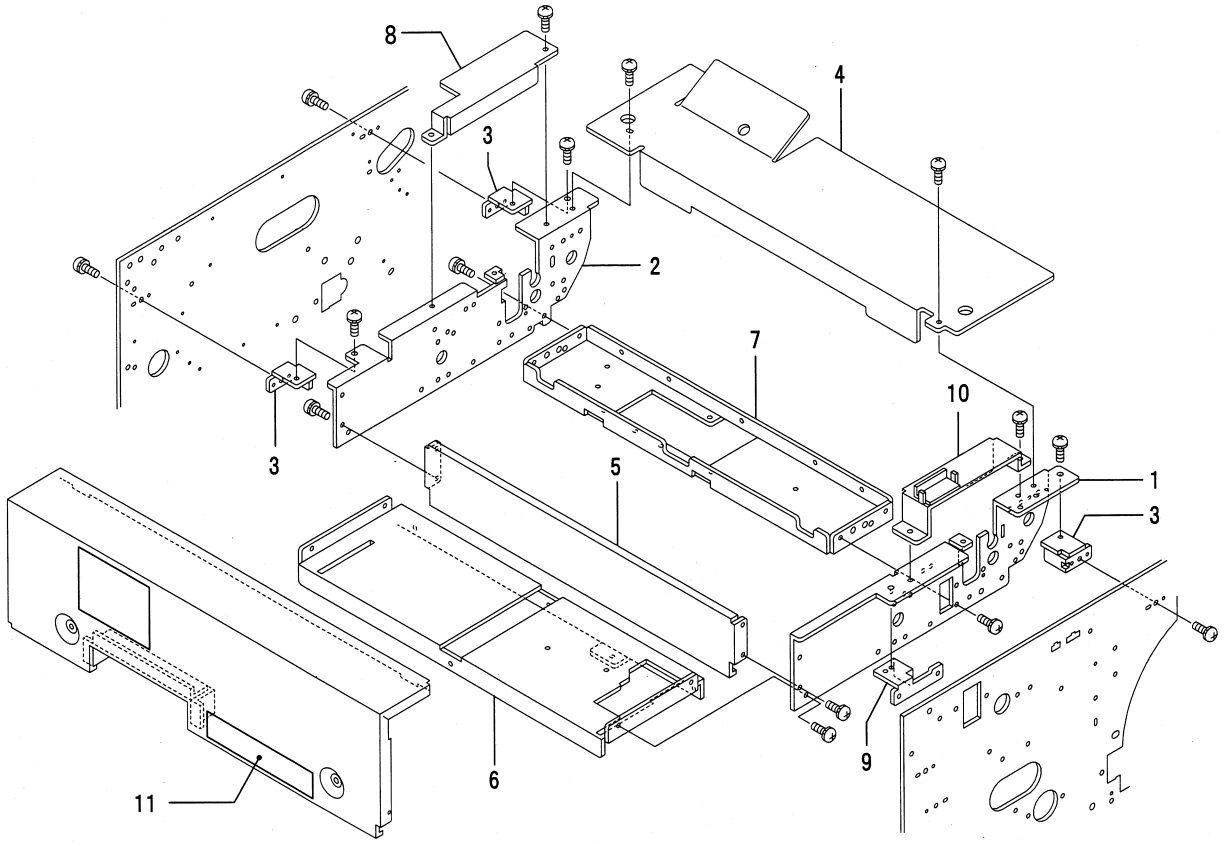

KEY No.	PARTS No.	DESCRIPTION	Q'TY	REMARKS
1	L1-P1010	Frame R	1	
2	L1-P1020	Frame L	1	
3	L1-P1030	Bracket	3	
4	L1-P1051	Cover	1	
5	L1-P1060	Reinforcing plate	1	
6	L1-P1070	Reinforcing plate	1	
7	L1-P1080	Stay	1	
8	L1-P1290	Cover L	1	
9	L1-P1320	Bracket L	1	
10	L1-P1350	Cover R unit	1	
11	L1-T1350	Direction	1	

20. Feed Ejection Section II

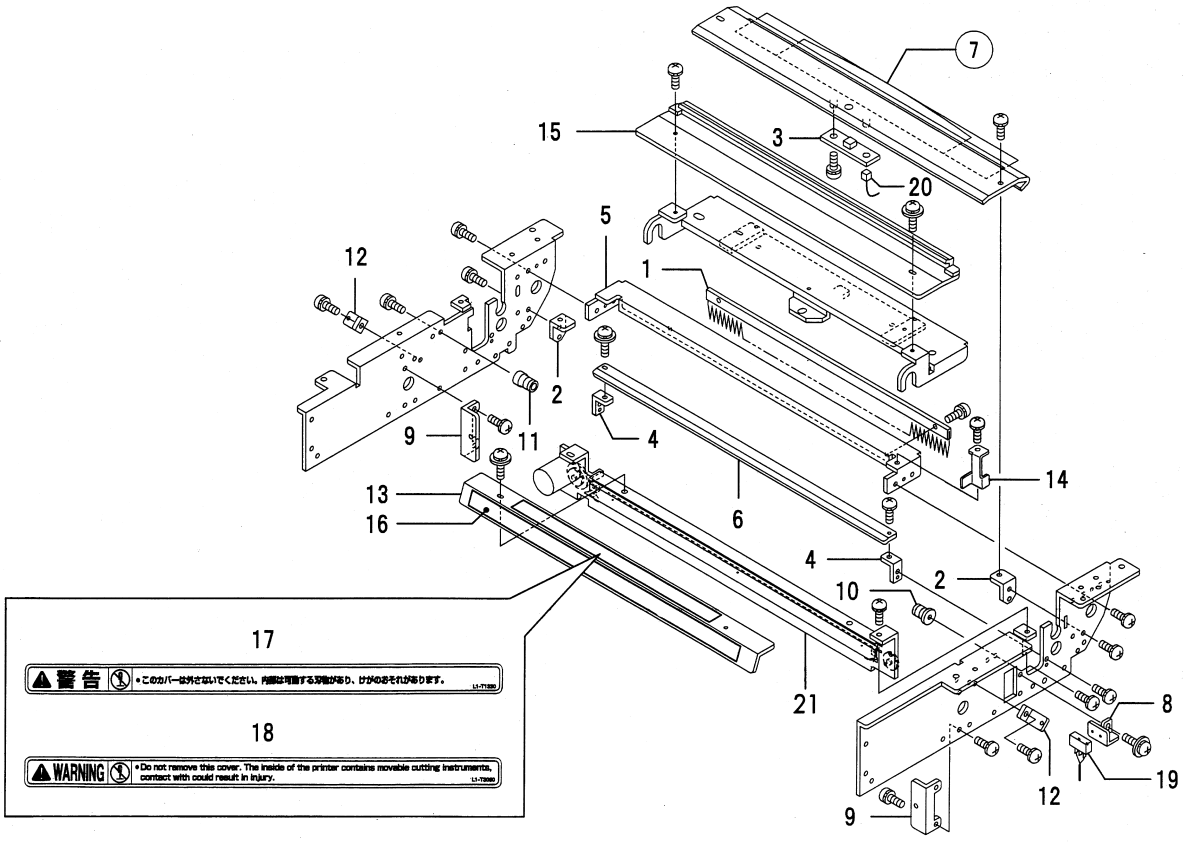

KEY No.	PARTS No.	DESCRIPTION	Q'TY	REMARKS
1	F7-21810	Brush	1	
2	J3-G1210	Bracket	2	
3	J8-V3230	End-mark P.C.B unit	1	
4	L1-G1061	Angle	2	
5	L1-P1040	Stay	1	
6	L1-P1090	Guide plate	1	
⑦	L1-P1101	Guide plate assy	1	
8	L1-P1130	Switch angle	1	
9	L1-P1140	Angle	2	
10	L1-P1190	Pillar R unit	1	
11	L1-P1210	Pillar L unit	1	
12	L1-P1230	Angle	2	
13	L1-P1240	Cutter cover	1	
14	L1-P1300	Stopper	1	
15	L1-P1330	Guide unit	1	
16	L1-T1340	Label,set line	1	
17	L1-T1330	Label,WARNING 1	1	D
18	L1-T3060	Label,WARNING 1	1	EA,EI
19	L1-W1160	Master feed cord 2 unit	1	
20	L1-W1180	End-mark relay cord	1	
21	L1-X1100	Cutter unit	1	

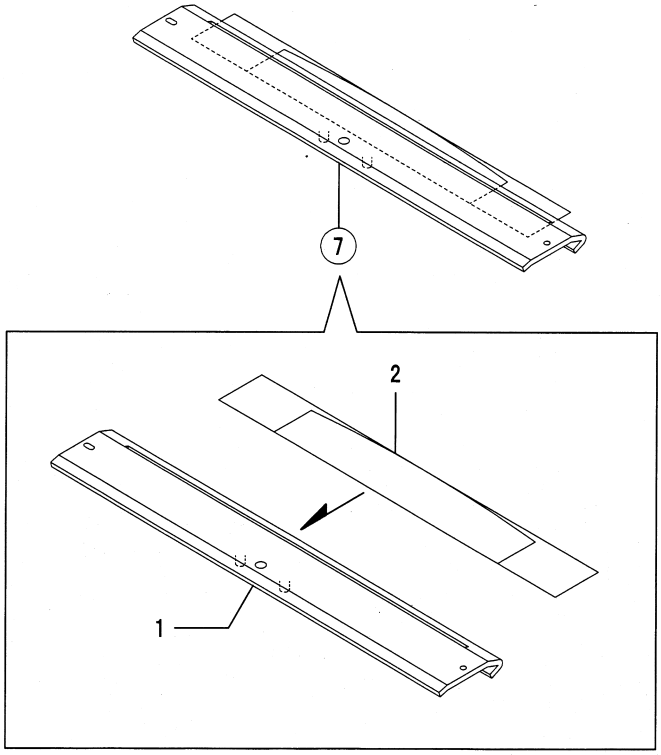

KEY No.	PARTS No.	DESCRIPTION	Q'TY	REMARKS
⑦	L1-P1101	Guide plate assy	1	
⑦-1	L1-P1110	Guide plate	1	
⑦-2	L1-P1251	Sliding plate unit	1	

21. Feed Ejection Section III

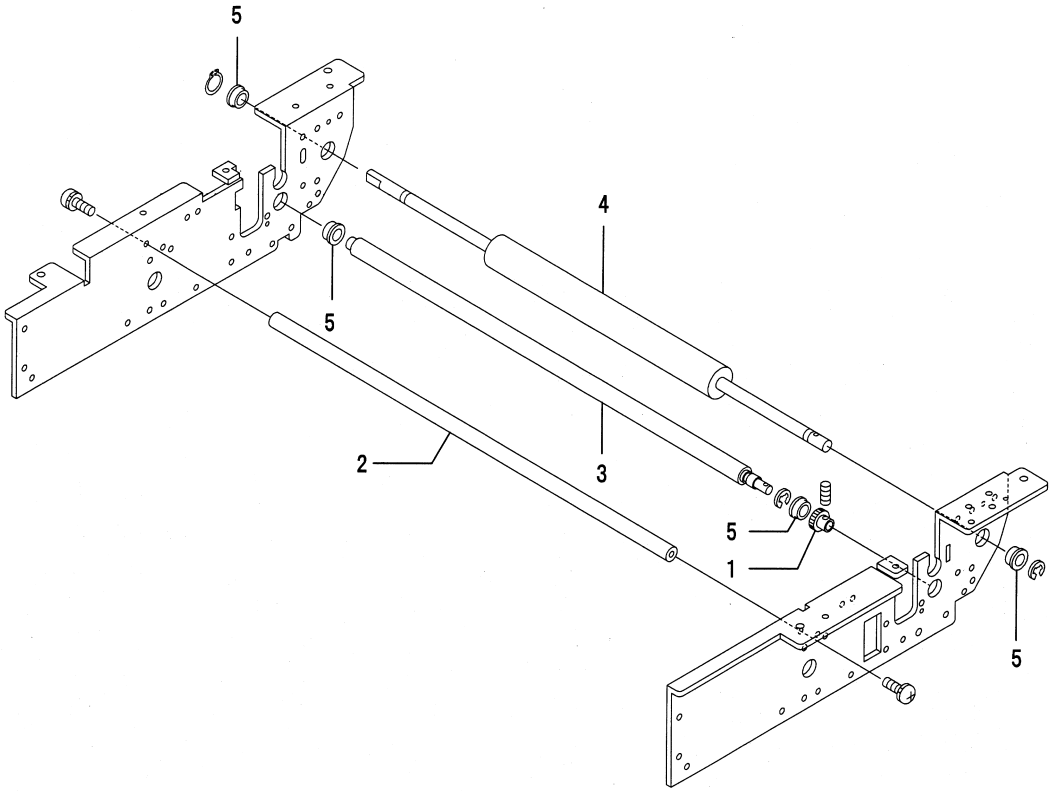

KEY No.	PARTS No.	DESCRIPTION	Q'TY	REMARKS
1	E1-45282	Gear	1	
2	L1-P2010	Shaft	1	
3	L1-P2040	Roller	1	
4	L1-P2050	Sponge roller	1	
5	72-25310	Bush	4	

22. Feed Ejection Section IV

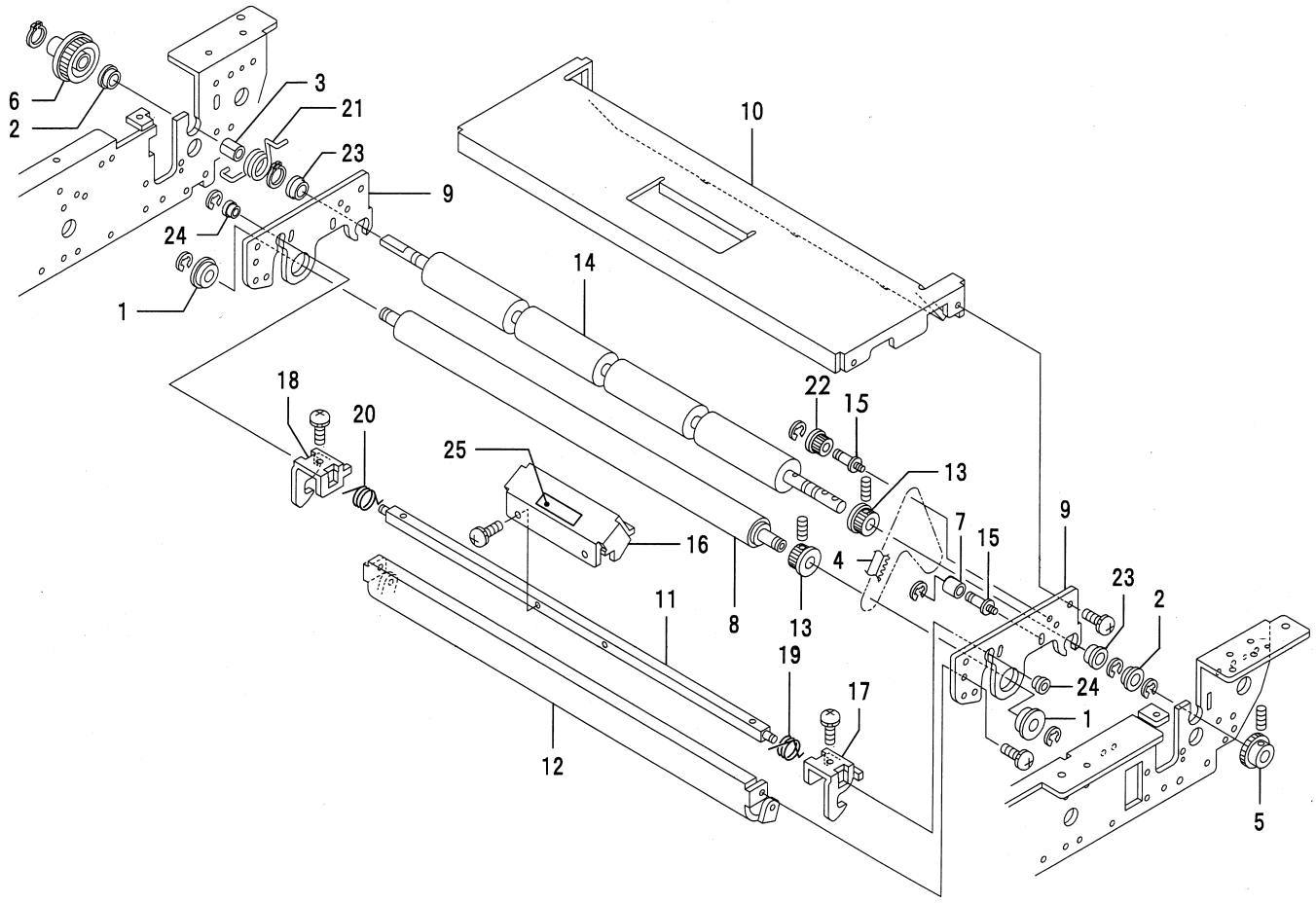

KEY No.	PARTS No.	DESCRIPTION	Q'TY	REMARKS
1	AA014	Ball bearing	2	
2	AA072	Ball bearing	2	
3	AC046	DU bush	1	
4	AJ136	Timing belt	1	
5	E1-45272	Gear	1	
6	J3-G2061	Timing pulley	1	
7	L1-G4041	Roller	1	
8	L1-P3010	Platen roller	1	
9	L1-P3020	Sub frame	2	
10	L1-P3040	Plate	1	
11	L1-P3050	Shaft	1	
12	L1-P3060	Guide plate	1	
13	L1-P3070	Pulley	2	
14	L1-P3080	Sponge roller	1	
15	L1-P3090	Shaft	2	
16	L1-P3100	Grip	1	
17	L1-P3110	Lever R	1	
18	L1-P3120	Lever L	1	
19	L1-P3130	Reverse spring R	1	
20	L1-P3140	Reverse spring L	1	
21	L1-P3151	Reverse spring	1	
22	L1-P3171	Pulley	1	
23	72-25310	Bush	2	
24	80-24230	Bush	2	
25	C9-59300	Label,PUSH	1	

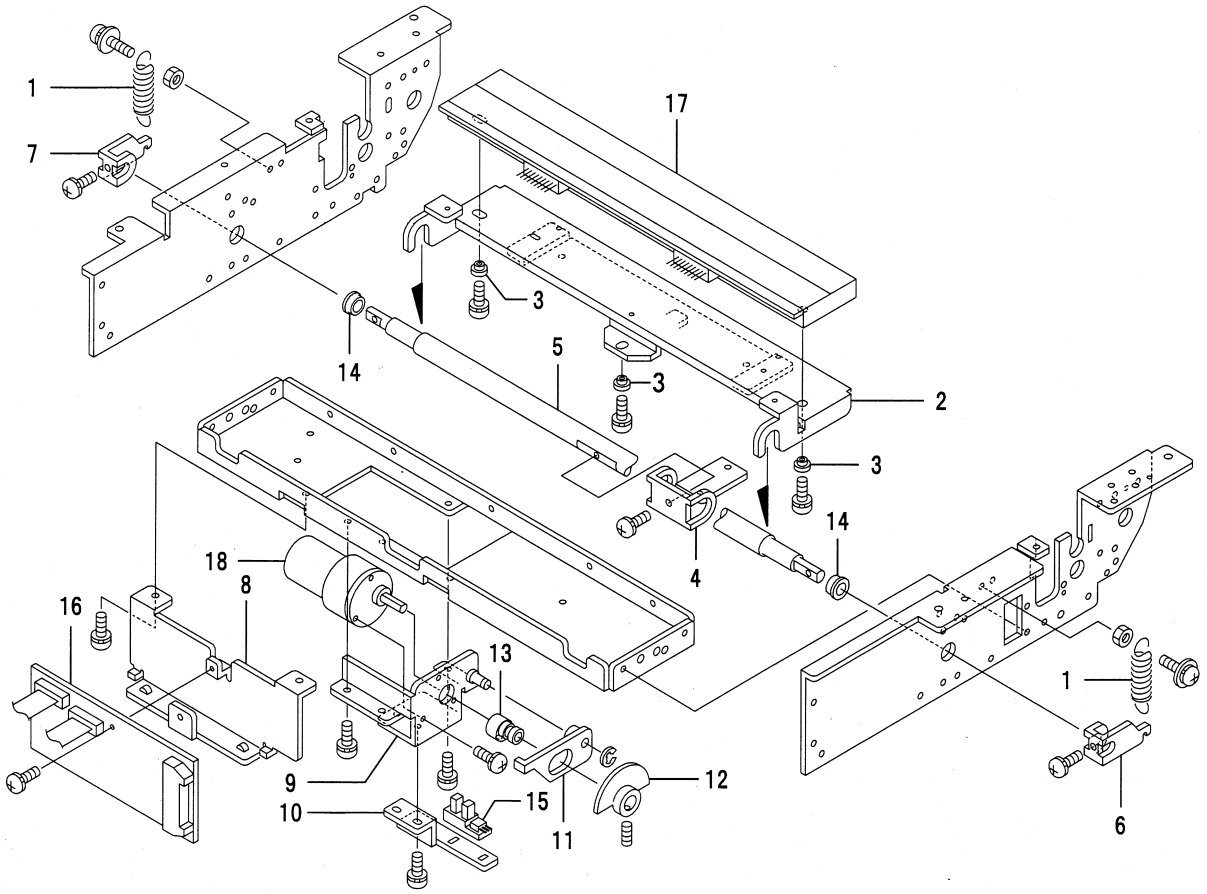

KEY No.	PARTS No.	DESCRIPTION	Q'TY	REMARKS
1	F7-21640	Spring T	2	
2	L1-P4011	Bracket unit	1	
3	L1-P4040	Z collar	3	
4	L1-P4051	Lever	1	
5	L1-P4060	Shaft	1	
6	L1-P4070	Lever R	1	
7	L1-P4080	Lever L	1	
8	L1-P4091	Bracket	1	
9	L1-P4100	Motor bracket unit	1	
10	L1-P4131	Sensor angle	1	
11	L1-P4141	Lever unit	1	
12	L1-P4170	Sensor plate unit	1	
13	L1-P4201	Eccentric shaft	1	
14	72-25310	Bush	2	
15	CA003	Photo microsensor	1	
16	J3-V3380	Thermal head P.C.B unit	1	
17	J3-X1210	Thermal head	1	
18	J8-X1110	Motor	1	

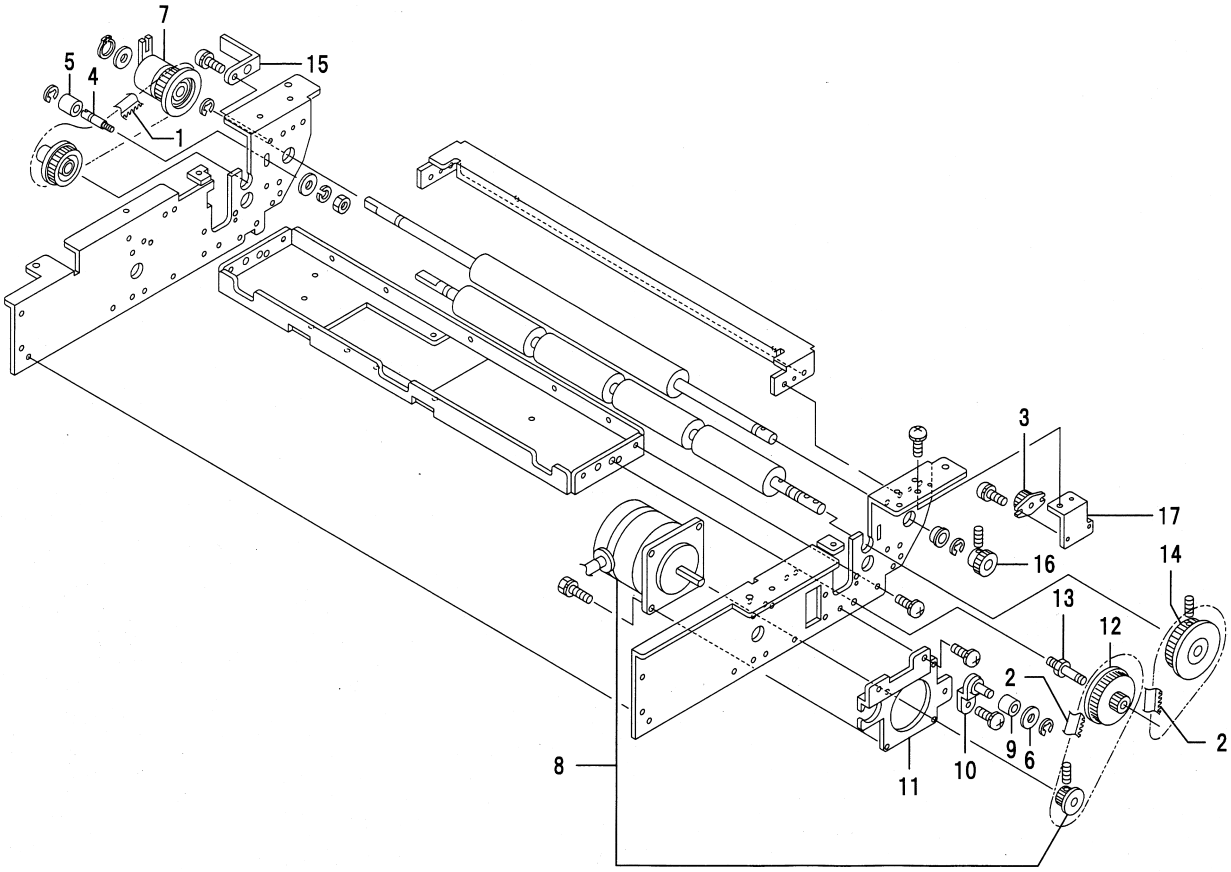

KEY No.	PARTS No.	DESCRIPTION	Q'TY	REMARKS
1	AJ019	Timing belt	1	
2	AJ086	Timing belt	2	
3	DA147	Rotary damper	1	
4	E1-46320	Shaft	1	
5	E1-46340	Roller	1	
6	J3-G4020	Washer	1	
7	J3-X1040	Master feed clutch	1	
8	J3-X1050	Stepping motor	1	
9	L1-G4041	Roller	1	
10	L1-P5010	Tension angle unit	1	
11	L1-P5030	Motor plate	1	
12	L1-P5040	Pulley	1	
13	L1-P5050	Shaft	1	
14	L1-P5060	Pulley	1	
15	L1-P5070	Angle	1	
16	L1-P5090	Gear	1	
17	L1-P5101	Angle	1	

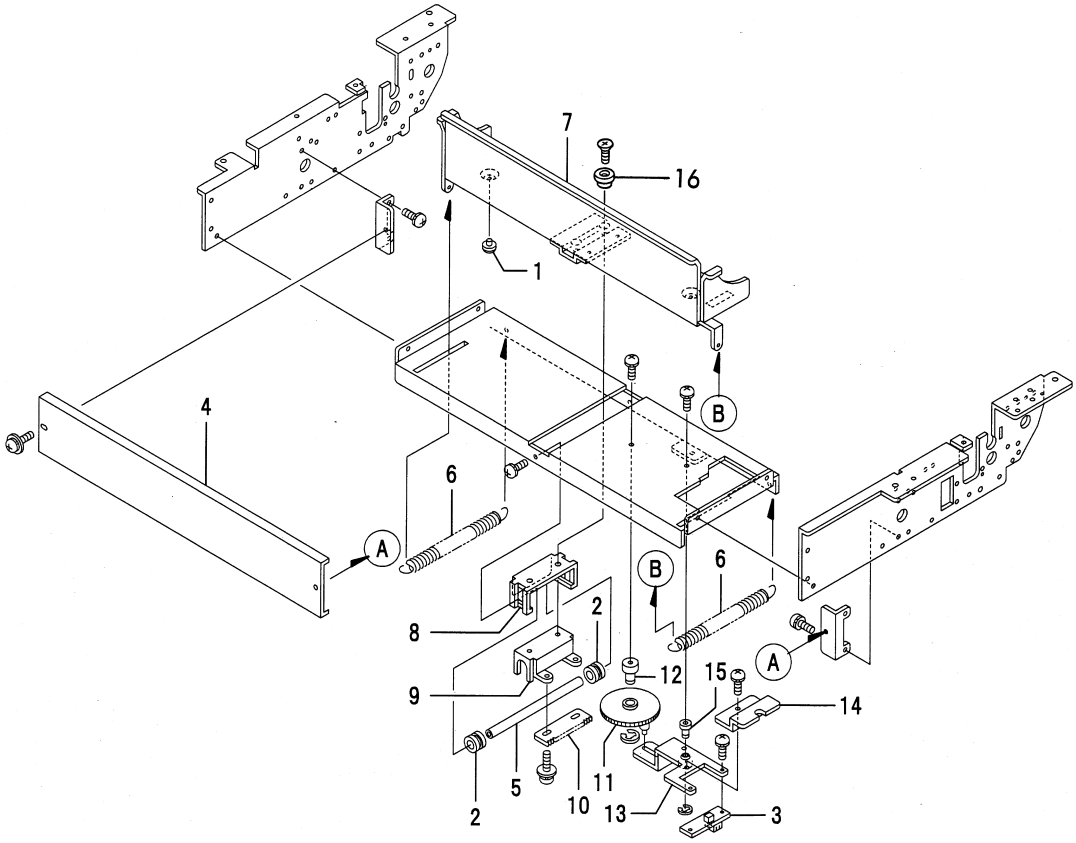

KEY No.	PARTS No.	DESCRIPTION	Q'TY	REMARKS
1	J2-L1100	Slidar	2	
2	J3-B2030	Collar	2	
3	J8-V3230	End-mark P.C.B unit	1	
4	L1-P6020	Guide B	1	
5	L1-P6040	Shaft	1	
6	L1-P6150	Spring T	2	
7	L1-P6161	Guide A unit	1	
8	L1-P6201	Bracket	1	
9	L1-P6211	Slidar	1	
10	L1-P6220	Rack	1	
11	L1-P6231	Gear	1	
12	L1-P6241	Pillar	1	
13	L1-P6251	Arm unit•@	1	
14	L1-P6280	Cover	1	
15	L1-P6292	Pillar	1	
16	Y408022	Y collar	2	

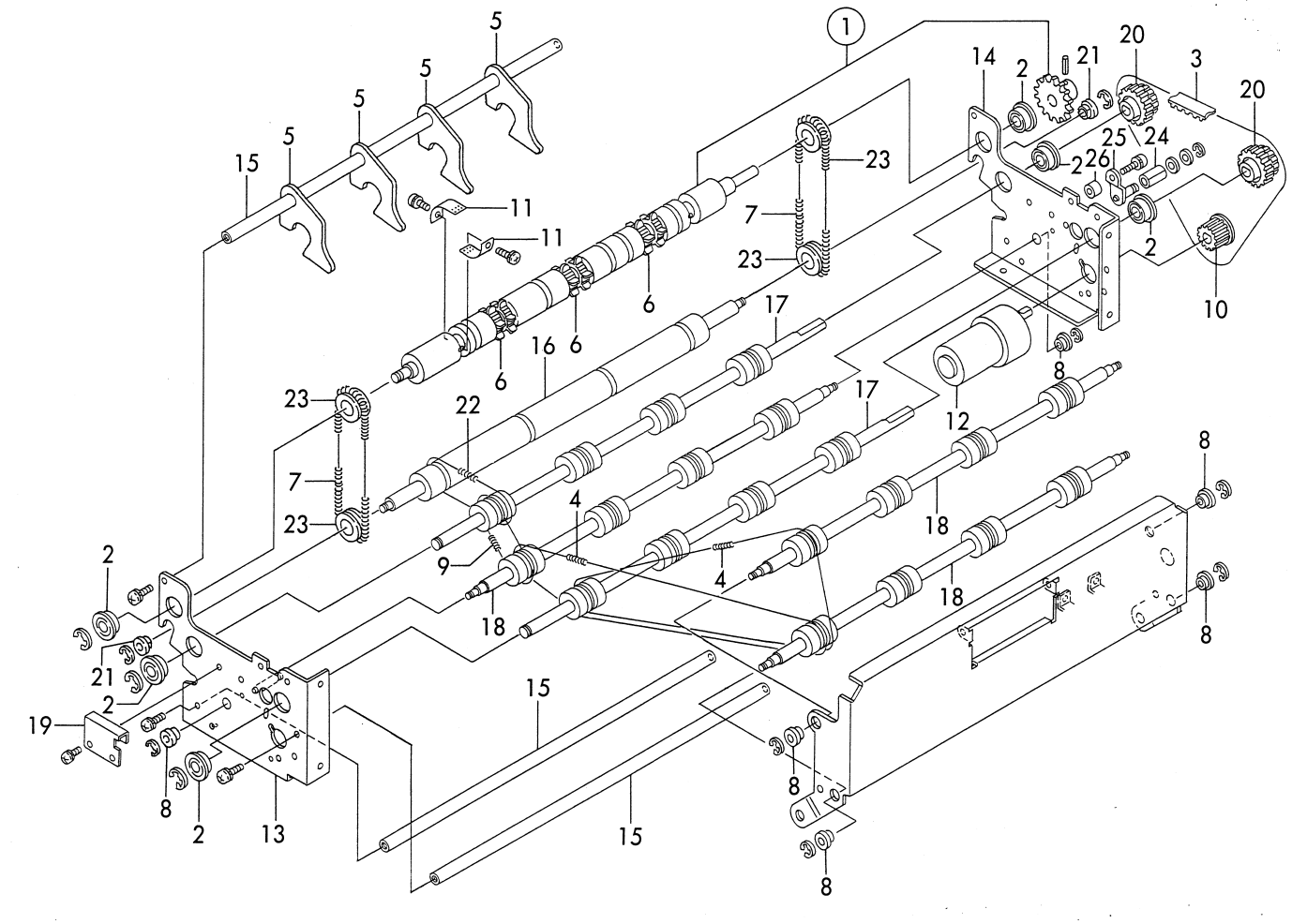

KEY No.	PARTS No.	DESCRIPTION	Q'TY	REMARKS
①	J3-S0009	Drawing roller unit	1	
2	AA014	Ball bearing	6	
3	AJ031	Timing belt	1	
4	C9-45860	Spring T(B)	8	
5	E1-35181	Guide plate	4	
6	E1-35250	Feather roll	3	
7	E1-35300	Spring T	2	
8	E1-35370	Bush	6	
9	E1-35461	Spring T	4	
10	F7-30050	Timing pulley	1	
11	F7-46801	Pawl A	4	
12	F7-81060	Motor	1	
13	J3-E1010	Frame R unit	1	
14	J3-E1020	Frame L	1	
15	J3-E1040	Reinforcing stay	3	
16	J3-E1060	Rubber roller	1	
17	J3-E1071	Driving roller unit	2	
18	J3-E1080	Subsidiary roller unit	3	
19	J3-E1090	Side guide	1	
20	J3-E1100	Pulley	2	
21	72-25210	Bush	2	
22	72-45361	Spring T	4	
23	72-46260	Tension ring	4	
24	AC003	DU bush	1	
25	E1-64100	Tension angle unit	1	
26	X412050	X collar	1	

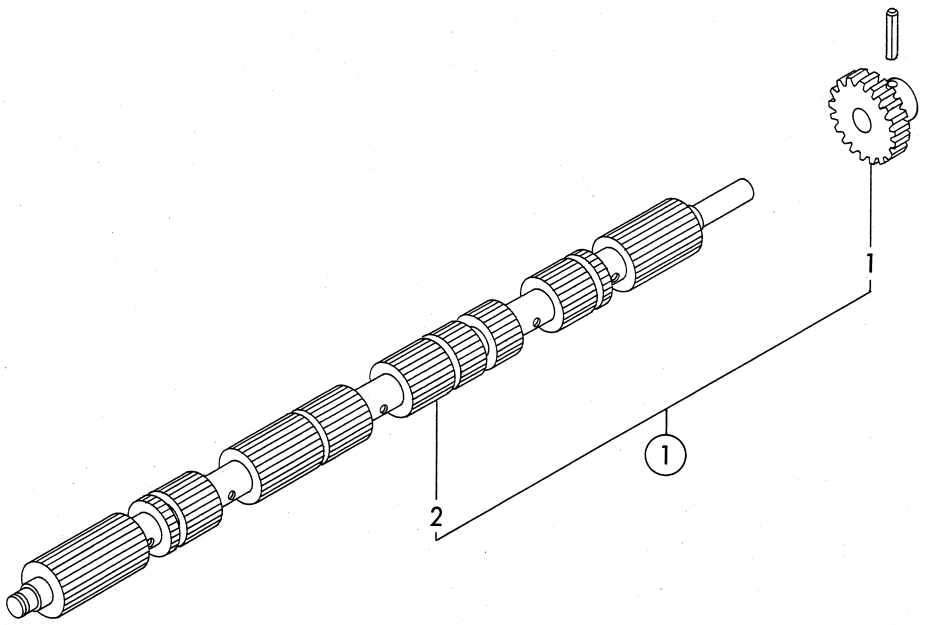

KEY No.	PARTS No.	DESCRIPTION	Q'TY	REMARKS
①	J3-S0009	Drawing roller unit	1	
①-1	NPN	Gear	1	
①-2	NPN	Drawing roller	1	

27. Plate Ejection Section II

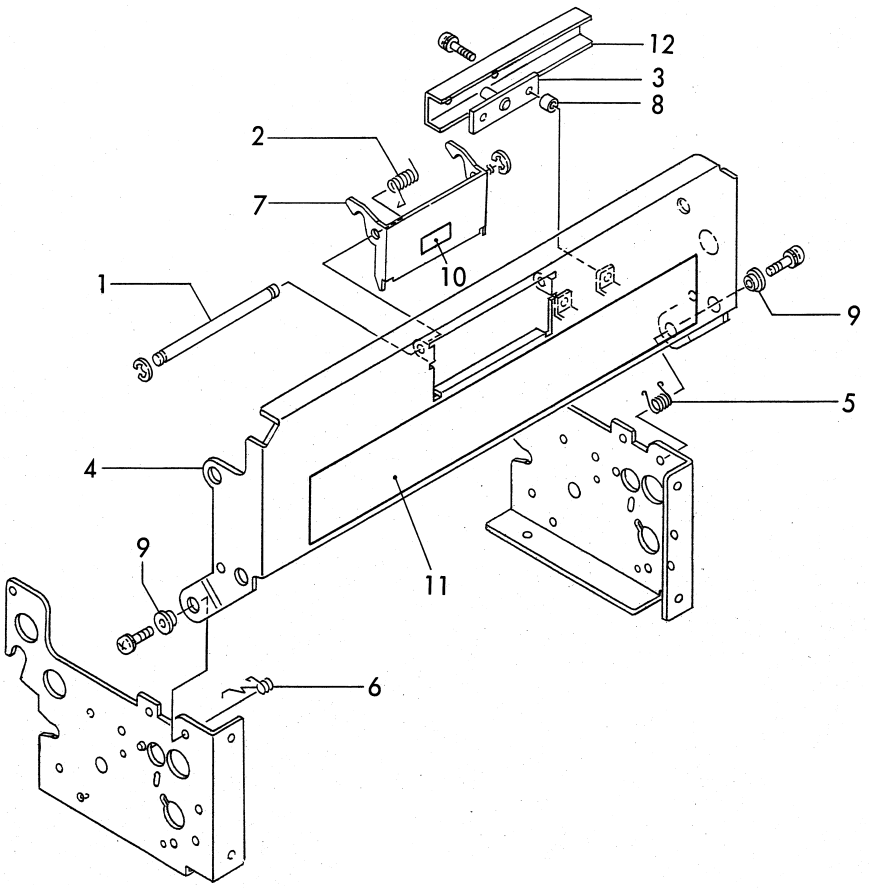

KEY No.	PARTS No.	DESCRIPTION	Q'TY	REMARKS
1	E1-35540	Shaft	1	
2	E1-35550	Reverse spring	1	
3	E1-88501	Light-receiving P.C.B	1	
4	J3-E2010	Top cover unit	1	
5	J3-E2020	Reverse spring R	1	
6	J3-E2030	Reverse spring L	1	
7	J3-E2040	Lock lever	1	
8	XB004	Pillar	2	
9	Z408022	Z collar	2	
10	C9-59300	Label,PUSH	1	D,EA,EI
11	J3-T1030	Label,MASTER EJECTION CORE	1	D
	J3-T3010	Label,MASTER EJECTION CORE	1	EA,EI
12	J3-E4040	Angle	1	

28. Plate Ejection Section III

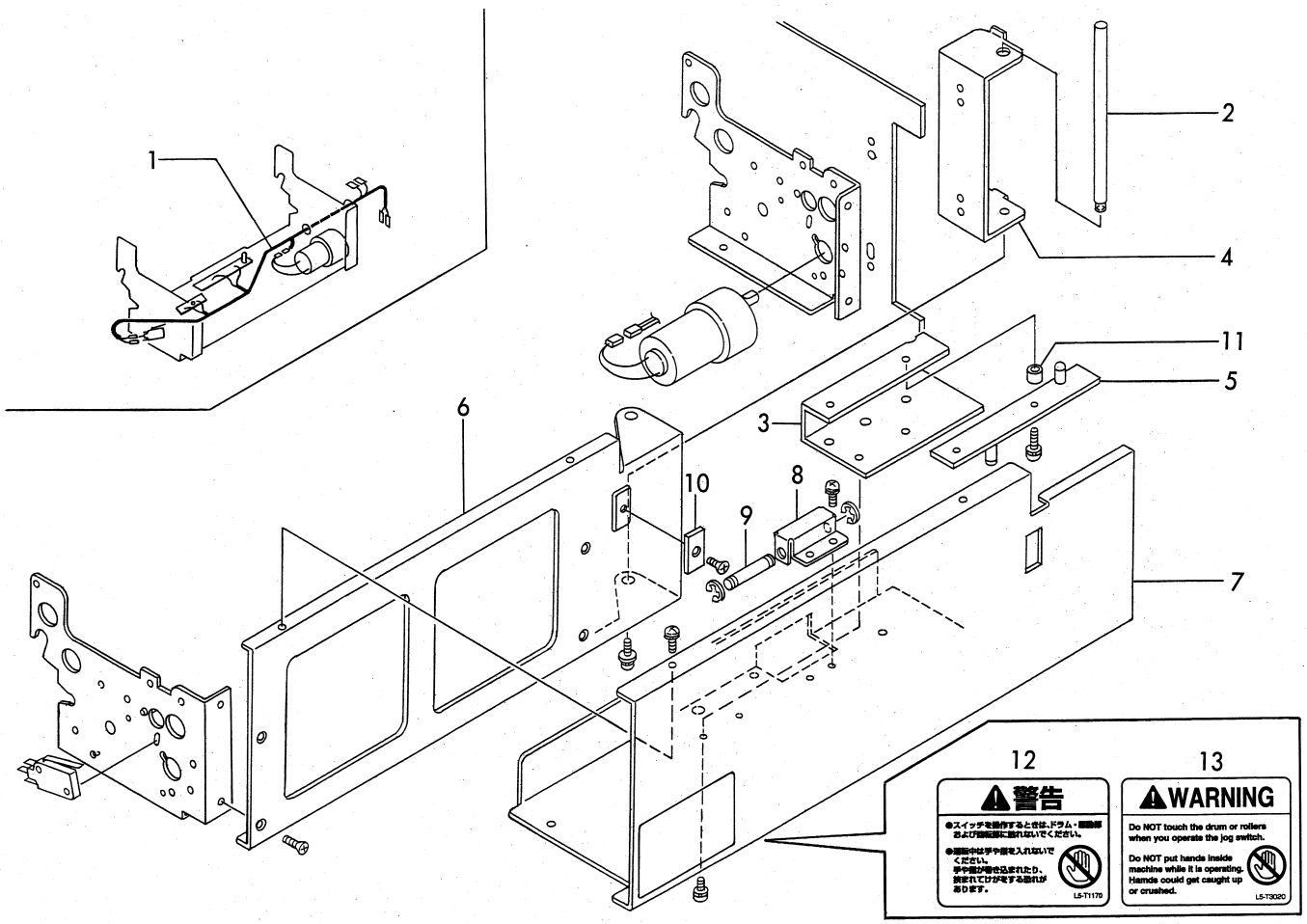

KEY No.	PARTS No.	DESCRIPTION	Q'TY	REMARKS
1	L1-W1060	Box cord unit	1	
2	E1-35641	Shaft	1	
3	E1-70850	Sensor cover	1	
4	J3-E4021	Hinge base	1	
5	J8-V3190	Light-emitting P.C.B	1	
6	L1-E4010	Bracket unit	1	
7	L1-E4020	Cover	1	
8	L1-E4030	Angle	1	
9	L1-E4040	Shaft	1	
10	L1-E4050	Plate	1	
11	XB004	Pillar	2	

29. Plate Ejection Section IV

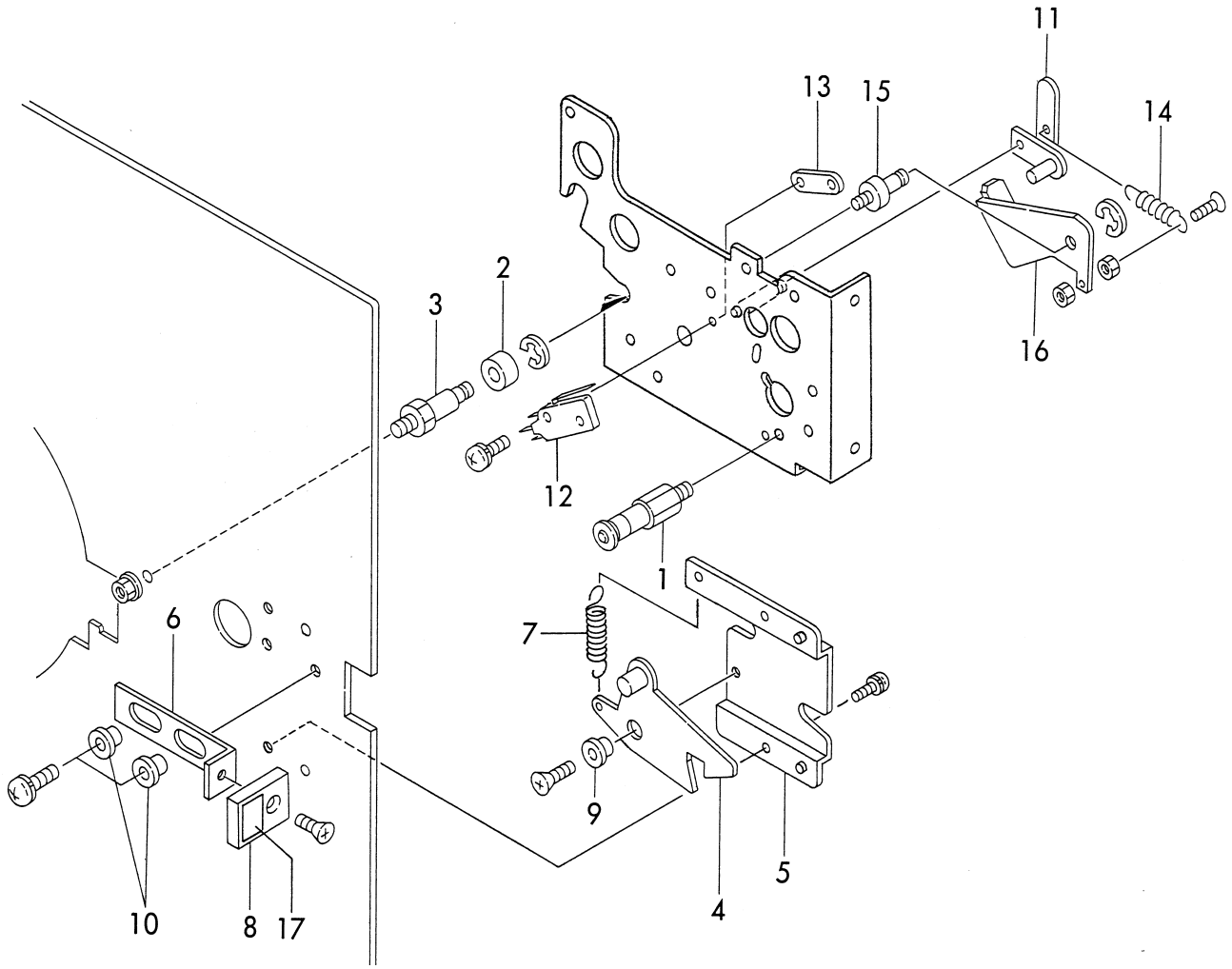

KEY No.	PARTS No.	DESCRIPTION	Q'TY	REMARKS
1	E1-35661	Shaft unit	1	
2	E1-35680	Roller	1	
3	E1-35701	Shaft	1	
4	J8-E3040	Lock pawl unit	1	
5	J8-E3070	Bracket	1	
6	E1-35781	Lever	1	
7	J8-E3090	Spring T	1	
8	J3-E3010	Knob	1	
9	Y408022	Y collar	1	
10	Z408022	Z collar	2	
11	J3-E5010	Lever unit	1	
12	LA005	Micro switch	1	
13	26-22651	Plate	1	
14	26-56180	Spring T	1	
15	72-42400	Shaft	1	
16	72-42411	Detecting lever	1	
17	C9-59300	Label,PUSH	1	D,EA,EI

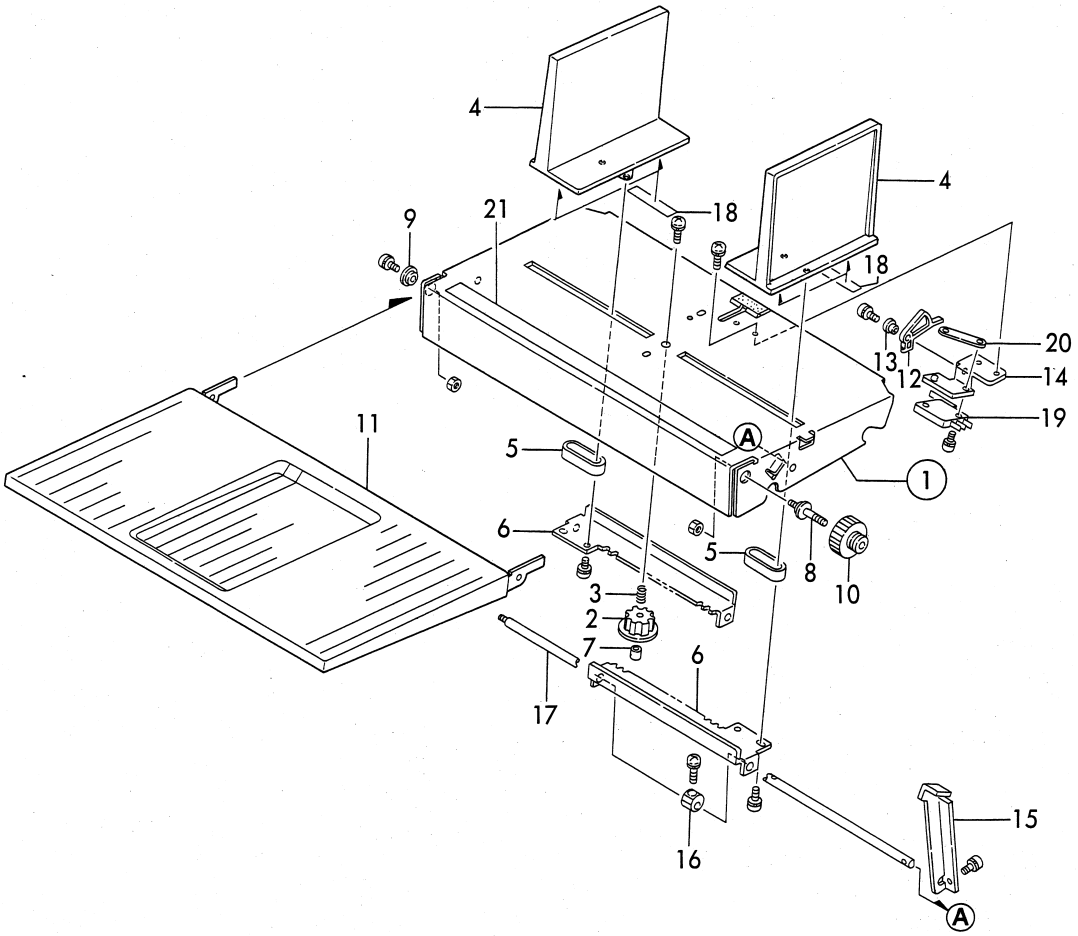

KEY No.	PARTS No.	DESCRIPTION	Q'TY	REMARKS
①	J3-B1011	Feeder plate unit	1	
2	E1-75340	Pinion	1	
3	E1-75351	Spring C	1	
4	L1-B1010	Feeder guide	2	
5	J3-B1080	Spacer	2	
6	J3-B1091	Luck	2	
7	J3-B1100	Nut	1	
8	J3-B1140	Shaft	1	
9	J3-B1150	Collar	1	
10	J3-B1160	Adjustment dial	1	
11	J3-B1191	Supplemental feeder plate	1	
12	J3-B1200	Lever	1	
13	J3-B1210	Collar	1	
14	J3-B1220	Switch bracket	1	
15	J3-B1230	Lock lever	1	
16	J3-B1240	Cam	1	
17	J3-B1251	Cam shaft	1	
18	J3-B1261	Sheet	4	
19	LA005	Micro switch	1	
20	26-22651	Plate	1	
21	L1-T1060	Size plate	1	D,EA
	L1-T4030	Size plate	1	EI

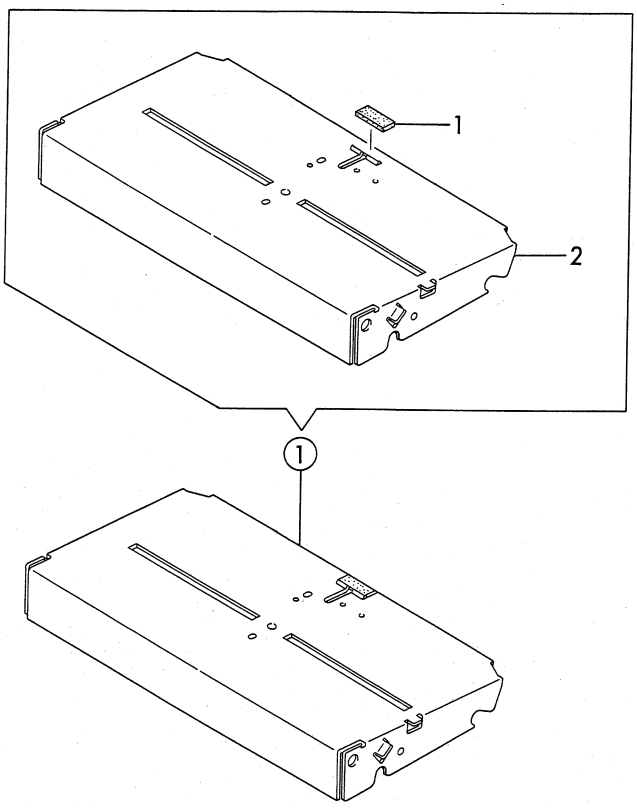

KEY No.	PARTS No.	DESCRIPTION	Q'TY	REMARKS
①	J3-B1011	Feeder plate unit	1	
①-1	NPN	Separator plate	1	
①-2	NPN	Feeder plate unit	1	

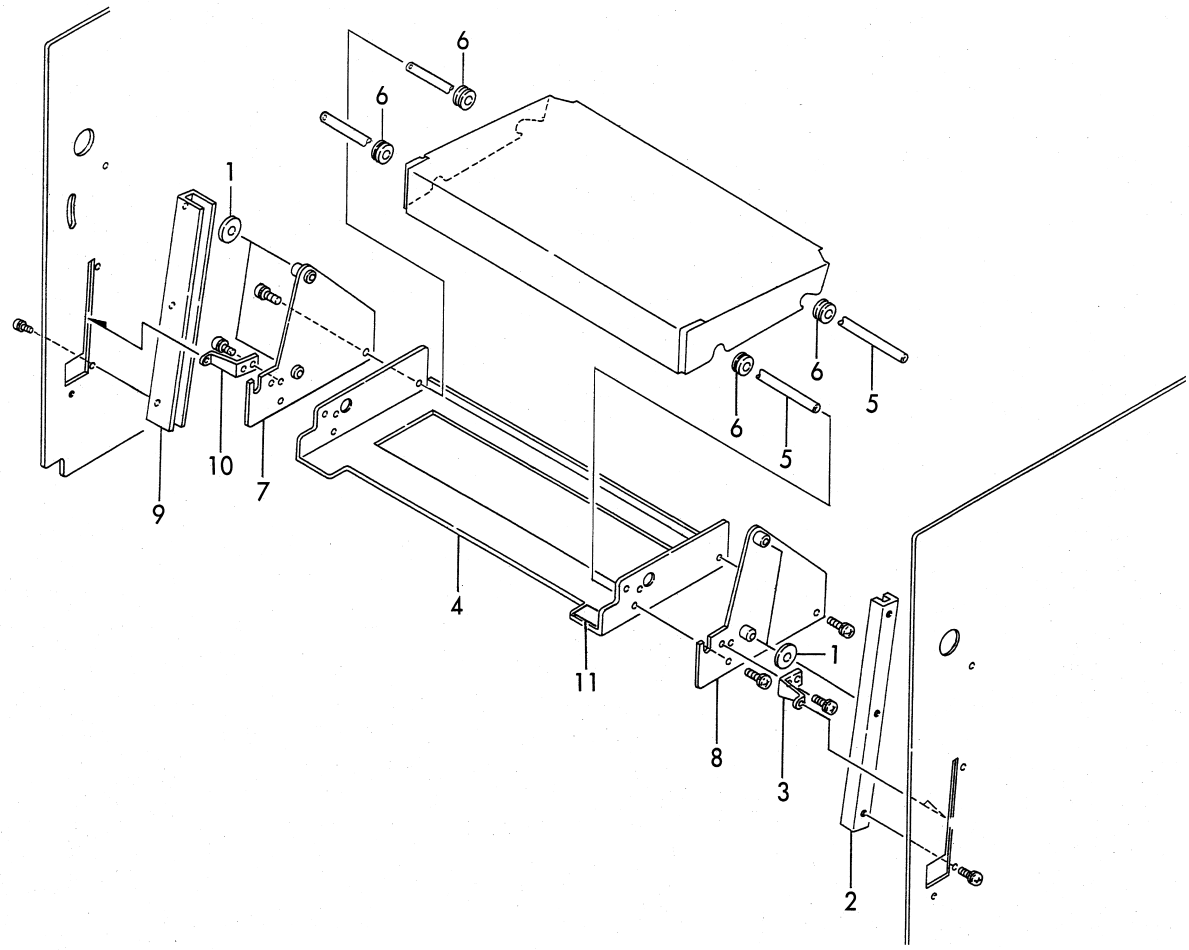

KEY No.	PARTS No.	DESCRIPTION	Q'TY	REMARKS
1	E1-21300	Cushion plate	6	
2	E1-21322	Rail	1	
3	E1-21330	Holding plate	1	
4	J3-B2011	Under tray	1	
5	J3-B2020	Shaft	2	
6	J3-B2030	Collar	4	
7	J3-B2040	Side plate unit R	1	
8	J3-B2060	Side plate unit L	1	
9	J3-B2100	Rail	1	
10	J3-B2110	Holding plate L	1	
11	J3-T1010	Print position scale label	1	D,EA,EI

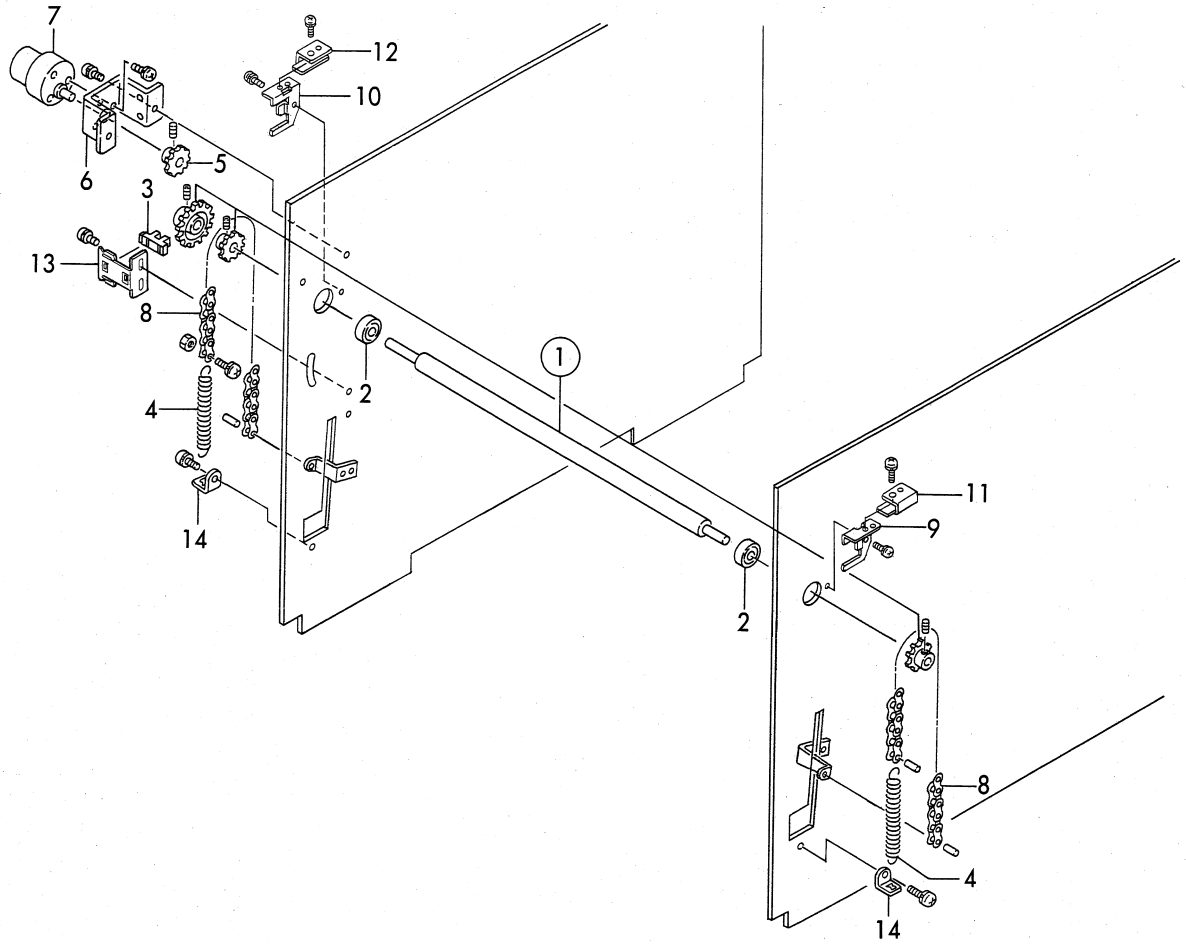

KEY No.	PARTS No.	DESCRIPTION	Q'TY	REMARKS
①	J3-B2071	Sprocket unit	1	
2	AA020	Ball bearing	2	
3	CA003	Photo microsensor	1	
4	E1-21580	Spring T	2	
5	E1-21621	Gear	1	
6	E1-21631	Bracket	1	
7	E1-82080	Motor	1	
8	J3-B2120	Chain	2	
9	J3-B2130	Bracket R	1	
10	J3-B2140	Bracket L	1	
11	J3-B2150	Angle R	1	
12	J3-B2160	Angle L	1	
13	L1-C4010	Sensor bracket	1	
14	52-61290	Angle	2	

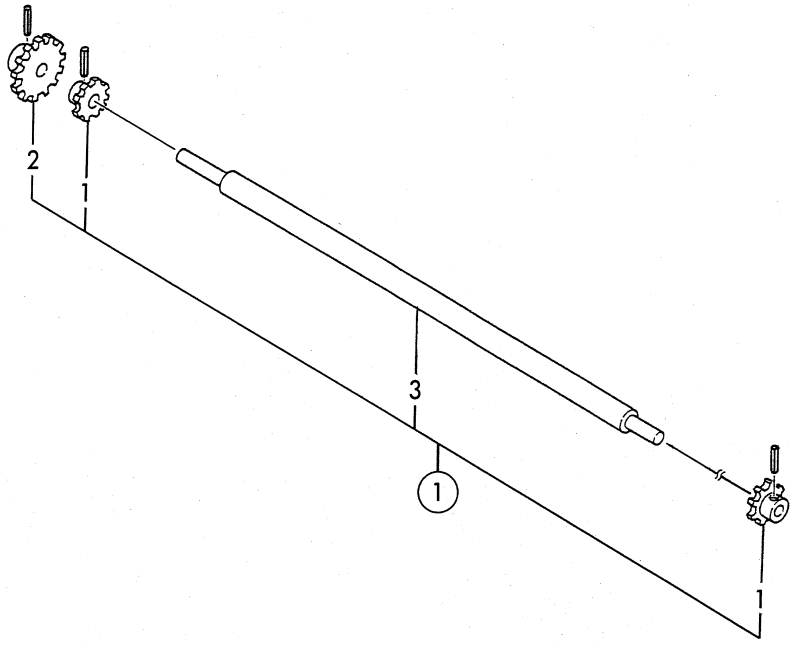

KEY No.	PARTS No.	DESCRIPTION	Q'TY	REMARKS
①	J3-B2071	Sprocket unit	1	
①-1	NPN	Sprocket	2	
①-2	NPN	Gear	1	
①-3	NPN	Shaft	1	

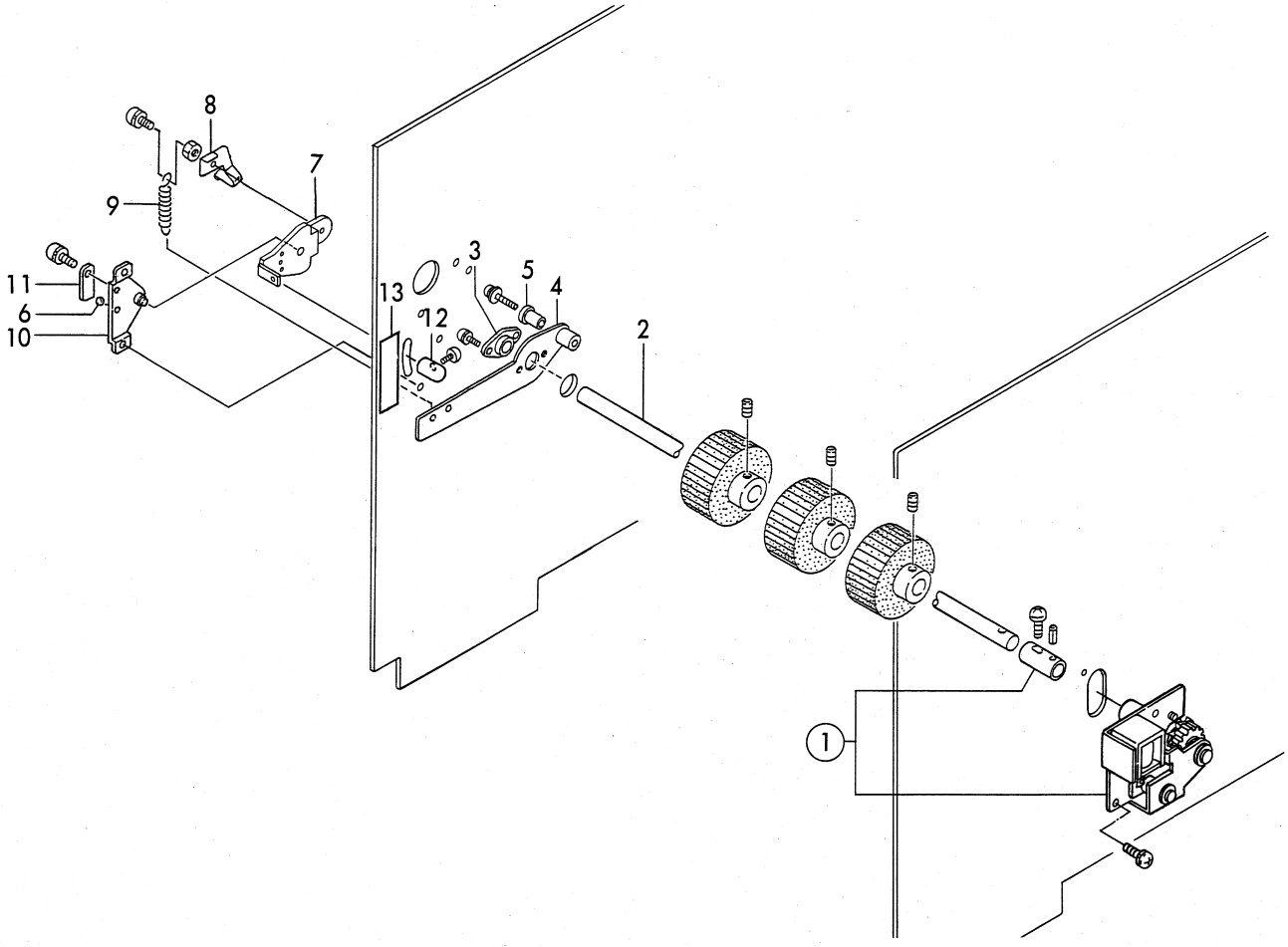

KEY No.	PARTS No.	DESCRIPTION	Q'TY	REMARKS
1	M3-S0001	Feeder clutch unit	1	
2	J3-B4011	Feed shaft	1	
3	A12-51051	Bush	1	
4	J3-B4051	Sensor plate unit	1	
5	J3-B4071	Shaft	1	
6	AA016	Steel ball	1	
7	C9-22530	Lever	1	
8	E1-21450	Stopper	1	
9	E1-21731	Spring T	1	
10	J3-B6010	Bracket unit	1	
11	72-21640	Plate spring	1	
12	72-21670	Knob	1	
13	019-0599	Label,FEED PRESSURE	1	D
	E1-79050	Label,FEED PRESSURE	1	EA,EI

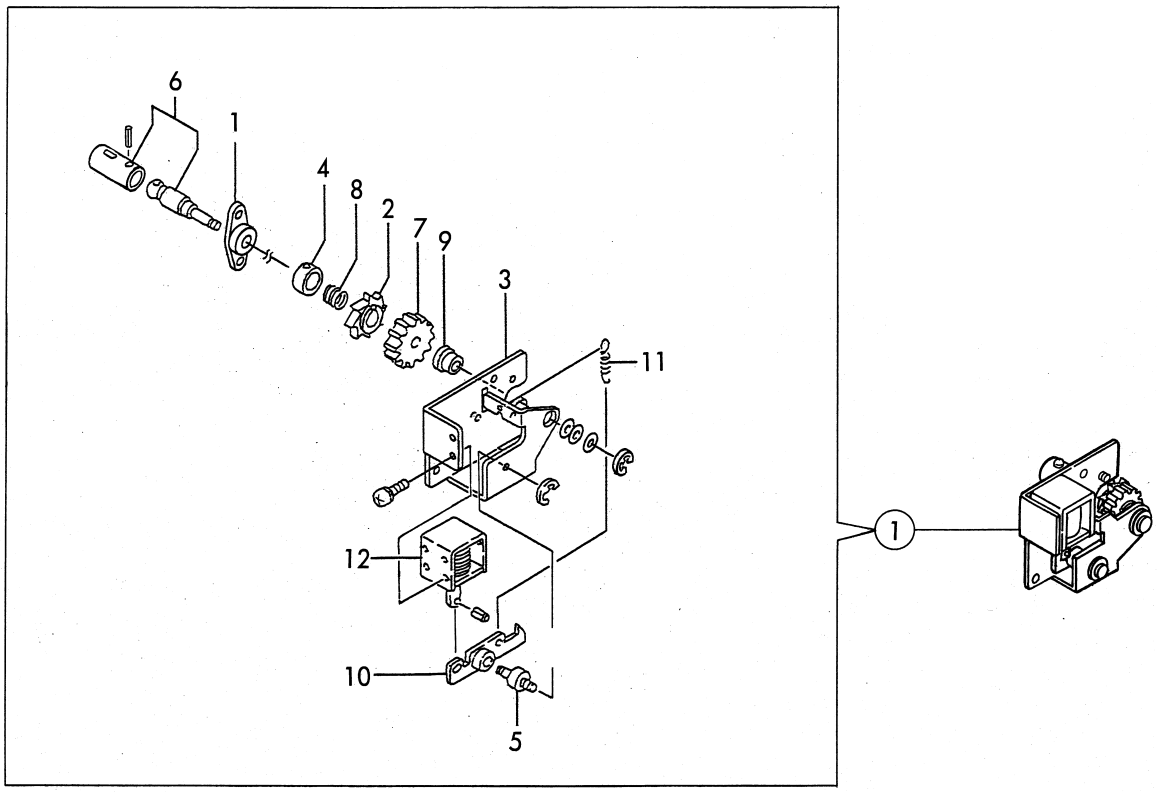

KEY No.	PARTS No.	DESCRIPTION	Q'TY	REMARKS
①	M3-S0001	Feeder clutch unit	1	
①-1	A12-51051	Bush	1	
①-2	F7-45230	Stopper	1	
①-3	J3-B4030	Bracket	1	
①-4	J3-B4080	Collar	1	
①-5	J3-B4090	Shaft	1	
①-6	L1-B4010	Pinion shaft unit	1	
①-7	72-23233	Pinion	1	
①-8	72-23265	Clutch spring	1	
①-9	72-23300	Bush	1	
①-10	72-23340	Stopper lever unit	1	
①-11	72-23380	Spring T	1	
①-12	72-89260	Solenoid	1	

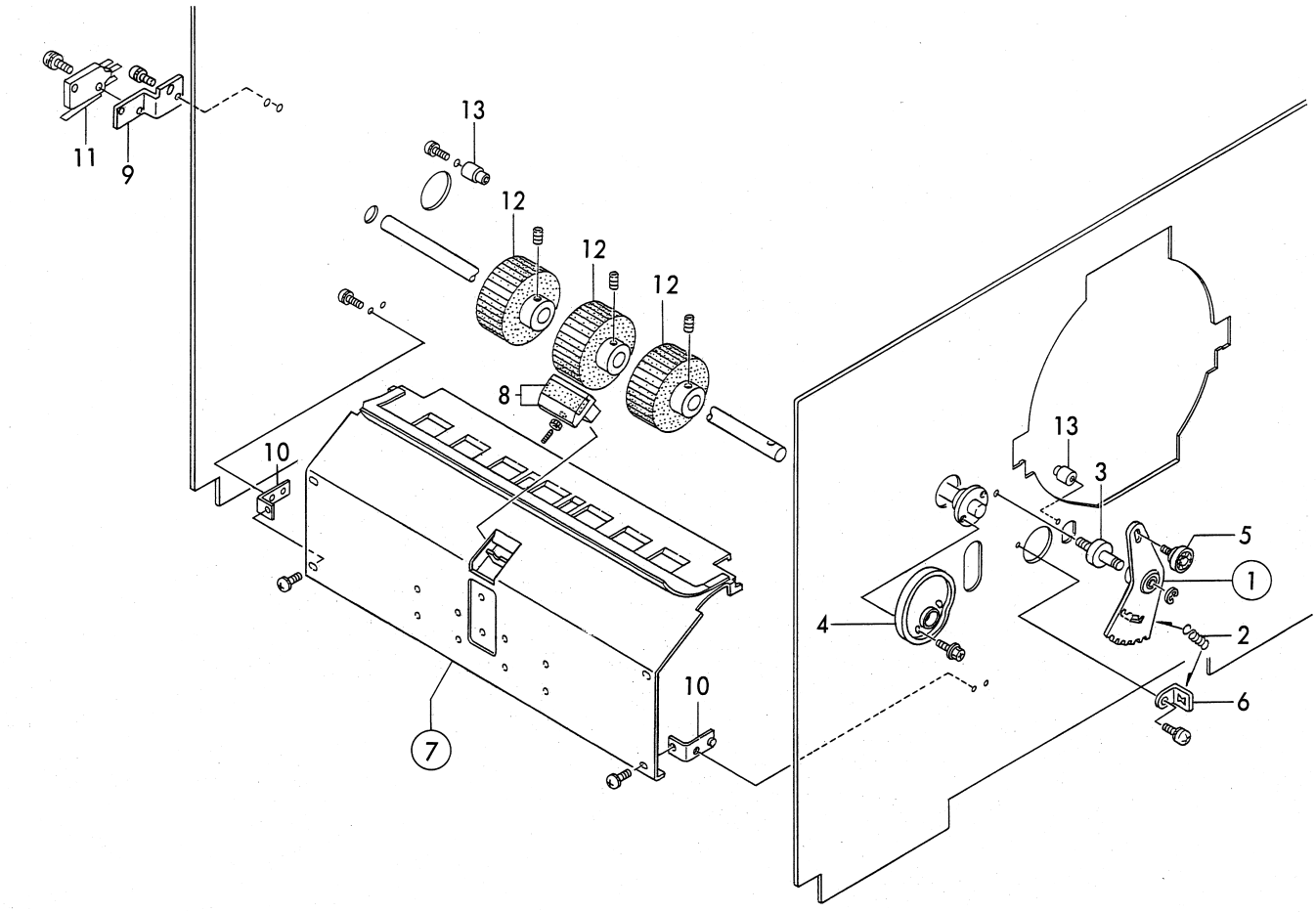

KEY No.	PARTS No.	DESCRIPTION	Q'TY	REMARKS
①	J3-S0015	Feed segment assy	1	
2	C9-23200	Spring T	1	
3	J3-B3030	Shaft	1	
4	J3-B3040	Feed cam	1	
5	J3-B3050	Roller unit	1	
6	52-61290	Angle	1	
⑦	J3-S0007	Feed inlet assy	1	
8	E1-23660	Separator plate	1	
9	J3-B5041	Bracket	1	
10	J3-B5050	Angle	4	
11	LA005	Micro switch	1	
12	26-23350	Rubber roller	3	
13	72-23630	Screw	2	

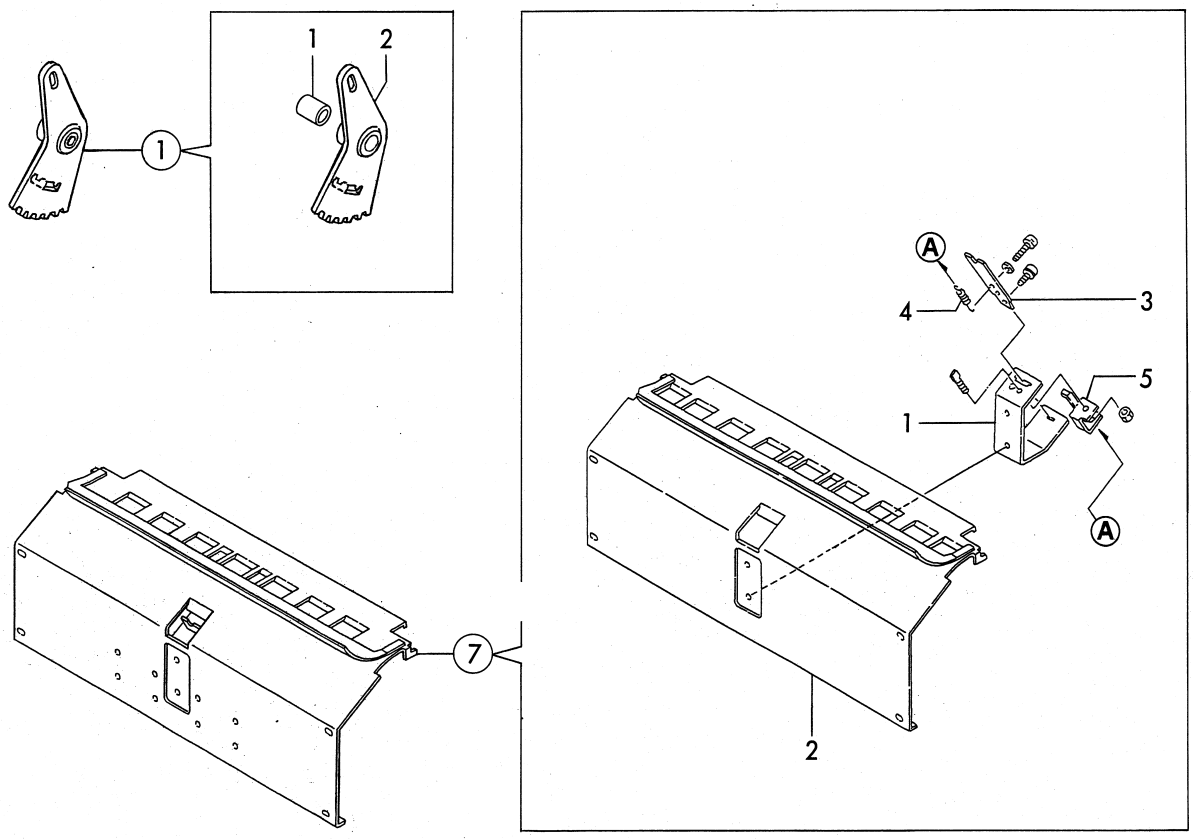

KEY No.	PARTS No.	DESCRIPTION	Q'TY	REMARKS
①	J3-S0015	Feed segment assy	1	
①-1	NPN	Bush	1	
①-2	NPN	Feed segment unit	1	
⑦	J3-S0007	Feed inlet assy	1	
⑦-1	NPN	Separator frame	1	
⑦-2	NPN	Feed inlet unit	1	
⑦-3	72-23710	Separator lever	1	
⑦-4	72-23760	Spring T	1	
⑦-5	72-23770	Holding plate	1	

35. Secondary Feed Section I

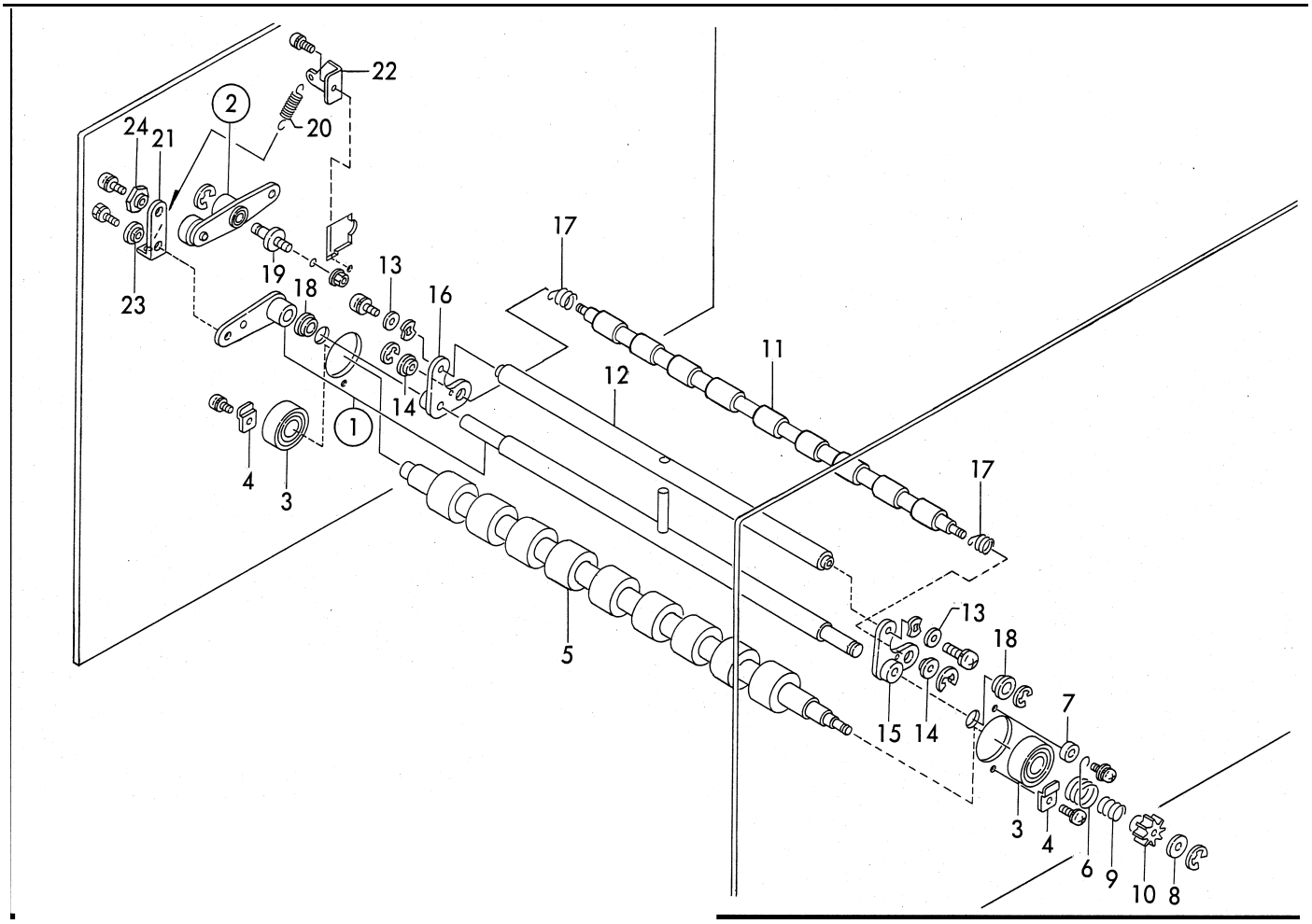

KEY No.	PARTS No.	DESCRIPTION	Q'TY	REMARKS
①	J3-C2022	Shaft assy	1	
②	J3-S0008	Escape lever assy	1	
3	AA006	Ball bearing	2	
4	C6-53650	Angle	2	
5	J3-C1010	T roll	1	
6	J3-C1020	Clutch spring	1	
7	X412050	X collar	1	
8	26-23250	Washer	1	
9	52-23340	Clutch spring	1	
10	L1-B4010	Pinion	1	
11	J3-C2010	G roll	1	
12	J3-C2070	Shaft	1	
13	26-57300	Washer	2	
14	72-25210	Bush	2	
15	72-25221	Bracket R unit	1	
16	72-25251	Bracket L unit	1	
17	72-25301	Clutch spring	2	
18	72-25310	Bush	2	
19	C9-25570	Shaft	1	
20	L1-C3010	Spring T	1	
21	L1-C5010	Link	1	
22	L1-C5020	Angle	1	
23	Z408022	Z collar	1	
24	90-53200	Eccentric shaft	1	

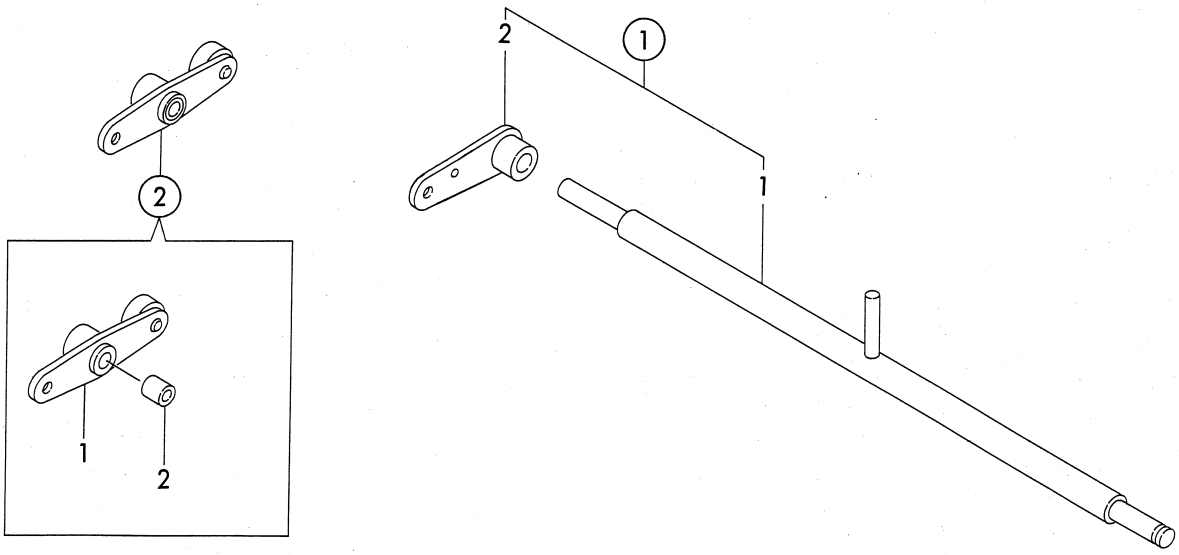

KEY No.	PARTS No.	DESCRIPTION	Q'TY	REMARKS
①	J3-C2022	Shaft assy	1	
①-1	NPN	Shaft unit	1	
①-2	NPN	Lever unit	1	
②	J3-S0008	Escape lever assy	1	
②-1	NPN	Escape lever unit	1	
②-2	NPN	Bush	1	

36. Secondary Feed Section II

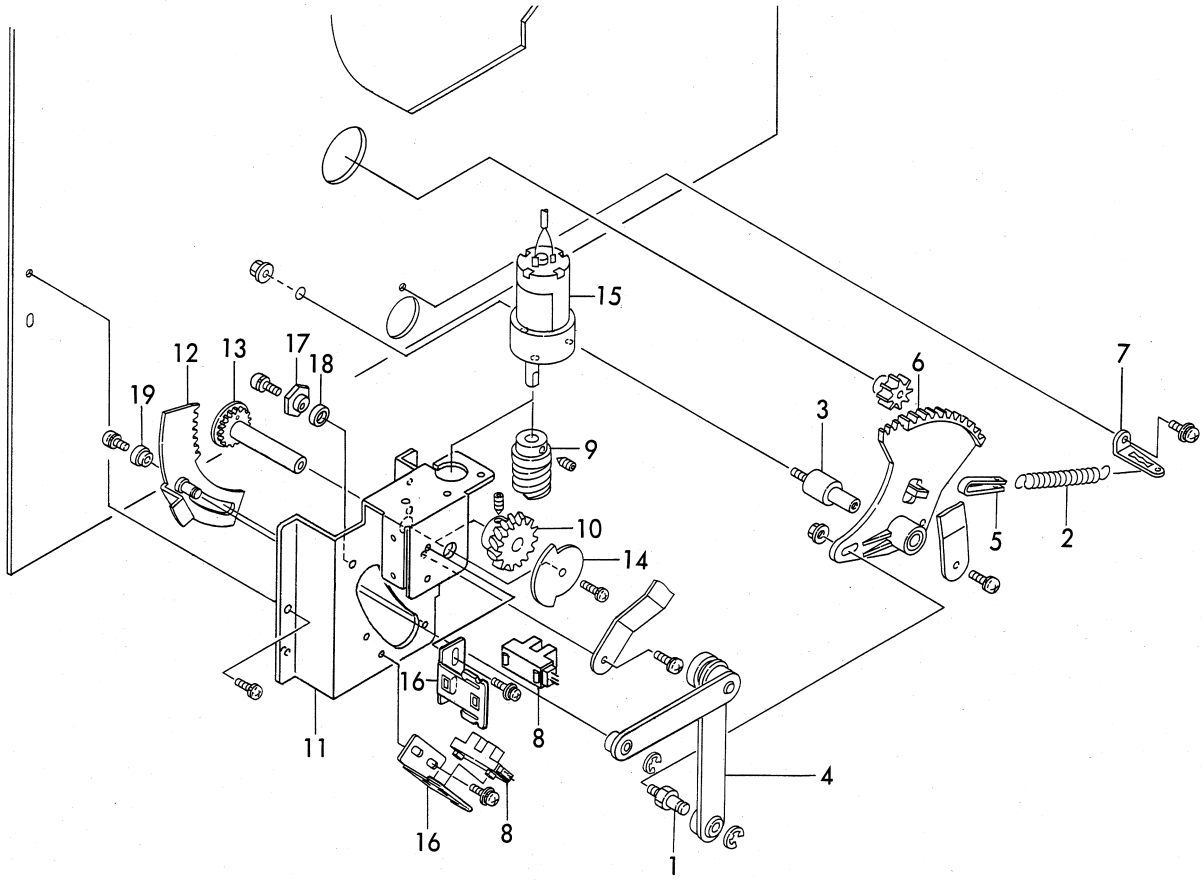

KEY No.	PARTS No.	DESCRIPTION	Q'TY	REMARKS
1	C9-25230	Pillar	1	
2	J3-C3010	Spring T	1	
3	J3-C3020	Shaft	1	
4	J3-C3040	Lever assy	1	
5	26-23100	Hook	1	
6	26-23111	Segment	1	
7	52-14380	Angle	1	
8	CA003	Photo microsensor	2	
9	E1-27170	Worm gear	1	
10	E1-27180	Worm wheel	1	
11	J3-C4013	Bracket	1	
12	J3-C4020	Segment unit	1	
13	J3-C4042	Gear unit	1	
14	J3-C4090	Cam	1	
15	J8-X1110	Motor	1	
16	L1-C4010	Sensor bracket	2	
17	L1-C4020	Eccentric shaft	1	
18	L1-C4030	Collar	1	
19	72-25810	Z collar	1	

37. Master Clamp Section

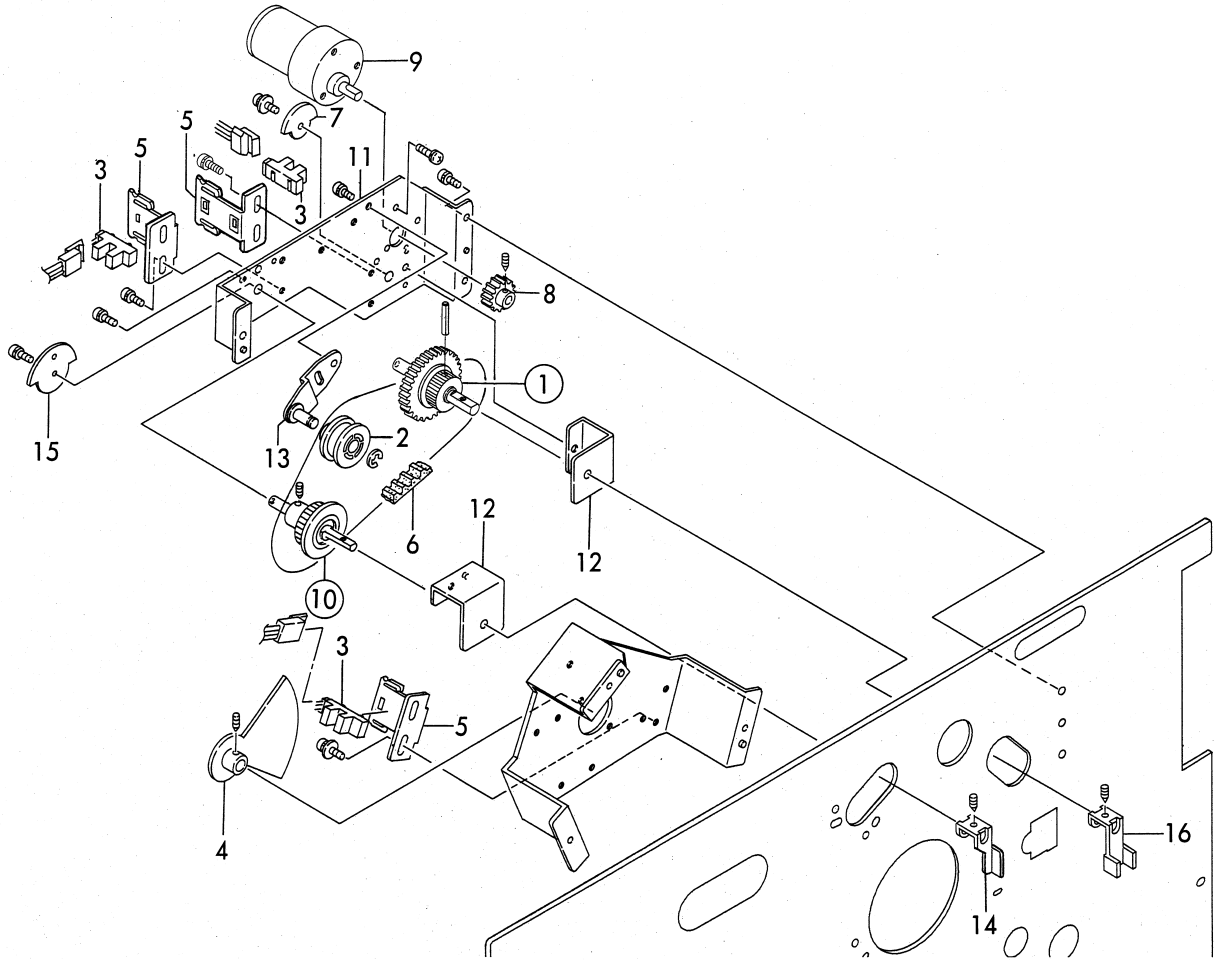

KEY No.	PARTS No.	DESCRIPTION	Q'TY	REMARKS
①	L1-L1030	Timing pulley assy	1	
2	L1-L1080	Idler	1	
3	CA003	Photo microsensor	3	
4	E1-16321	Sensor plate unit	1	
5	L1-C4010	Sensor bracket	3	
6	AJ003	Timing belt	1	
7	E1-16280	Cam	1	
8	E1-21621	Gear	1	
9	E1-82080	Motor	1	
⑩	L1-L1051	Timing pulley assy	1	
11	J3-L1050	Bracket	1	
12	J3-L1061	Angle	2	
13	J3-L1071	Tension angle unit	1	
14	L1-L1011	Lever	1	
15	L1-L1020	Cam	1	
16	J3-L1010	Lever	1	

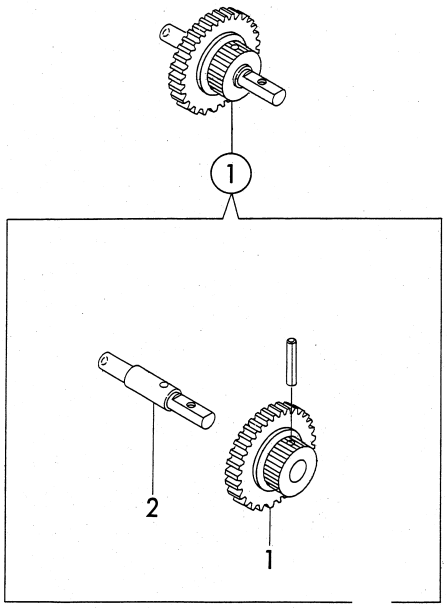

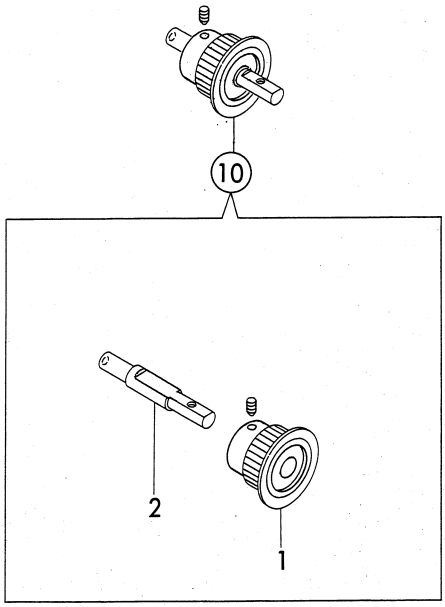

KEY No.	PARTS No.	DESCRIPTION	Q'TY	REMARKS
①	L1-L1030	Timing pulley assy	1	
①-1	NPN	Timing pulley	1	
①-2	NPN	Shaft	1	
⑩	L1-L1051	Timing pulley assy	1	
⑩-1	NPN	Timing pulley	1	
⑩-2	NPN	Shaft	1	

38. Drum Driving Section

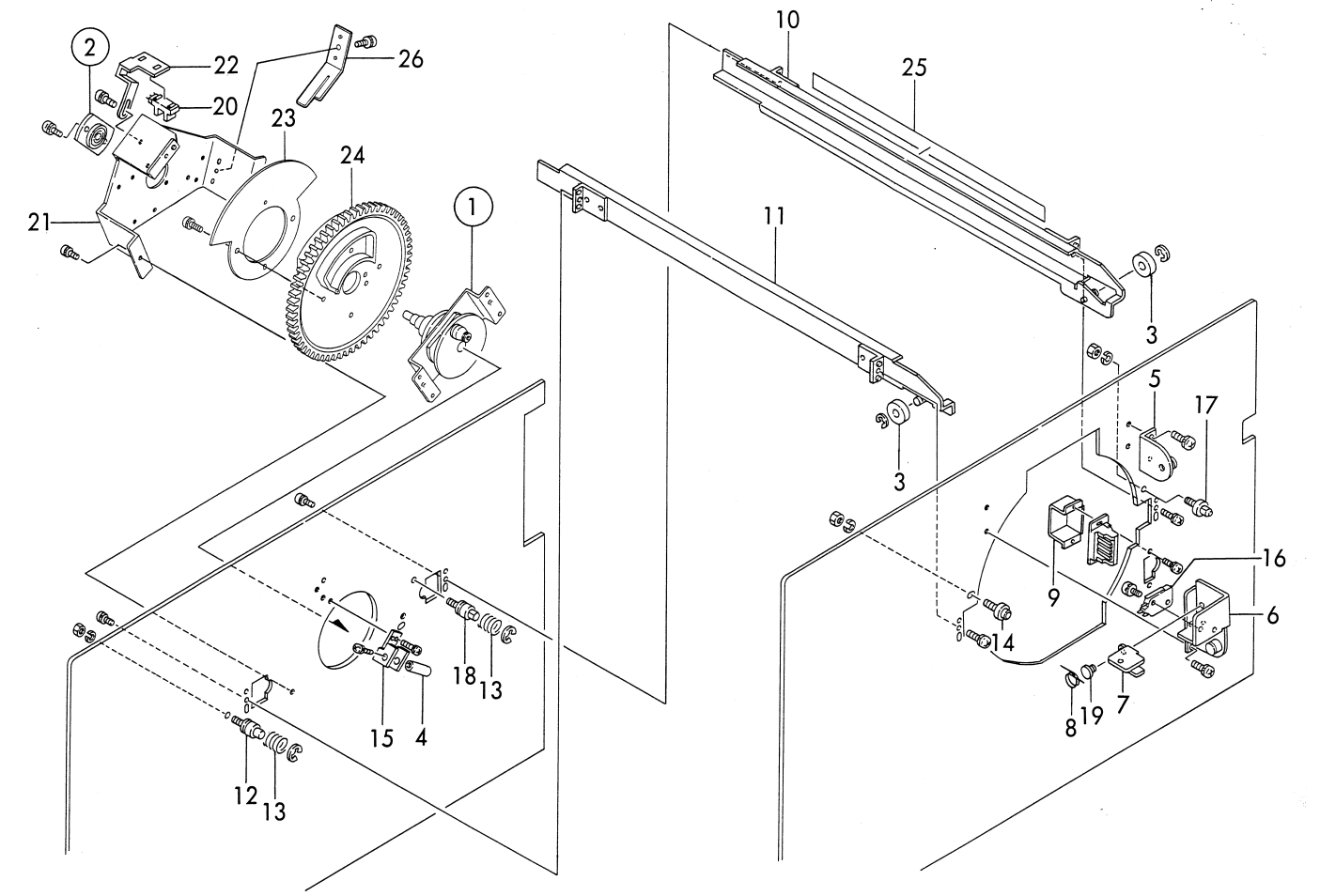

KEY No.	PARTS No.	DESCRIPTION	Q'TY	REMARKS
①	J3-F3011	Driving shaft assy	1	
②	E1-A0060	Holder unit	1	
3	C9-12410	Roller	2	
4	C9-14360	Shaft	1	
5	F7-11081	Angle unit R	1	
6	F7-11100	Angle unit L	1	
7	F7-11310	Lever	1	
8	L1-A8060	Spring	1	
9	F7-11550	Cover	1	
10	J3-A8012	Guide rail R unit	1	
11	J3-A8052	Guide rail L unit	1	
12	L1-A8010	Pillar	1	
13	J3-A8090	Spring C	2	
14	L1-A8020	Pillar	1	
15	J3-A8110	Bracket	1	
16	LA003	Micro switch	1	
17	L1-A8040	Pillar	1	
18	L1-A8030	Pillar	1	
19	L1-A8050	Pillar	1	
20	CA003	Photo microsensor	1	
21	J3-F3040	Bracket	1	
22	J3-F3080	Sensor angle	1	
23	L1-F3010	Index	1	
24	L1-F3020	Gear	1	
25	E1-52560	Label,CAUTION	1	D
	E1-79230	Label,CAUTION	1	EA,EI
26	L1-M1151	Stopper	1	

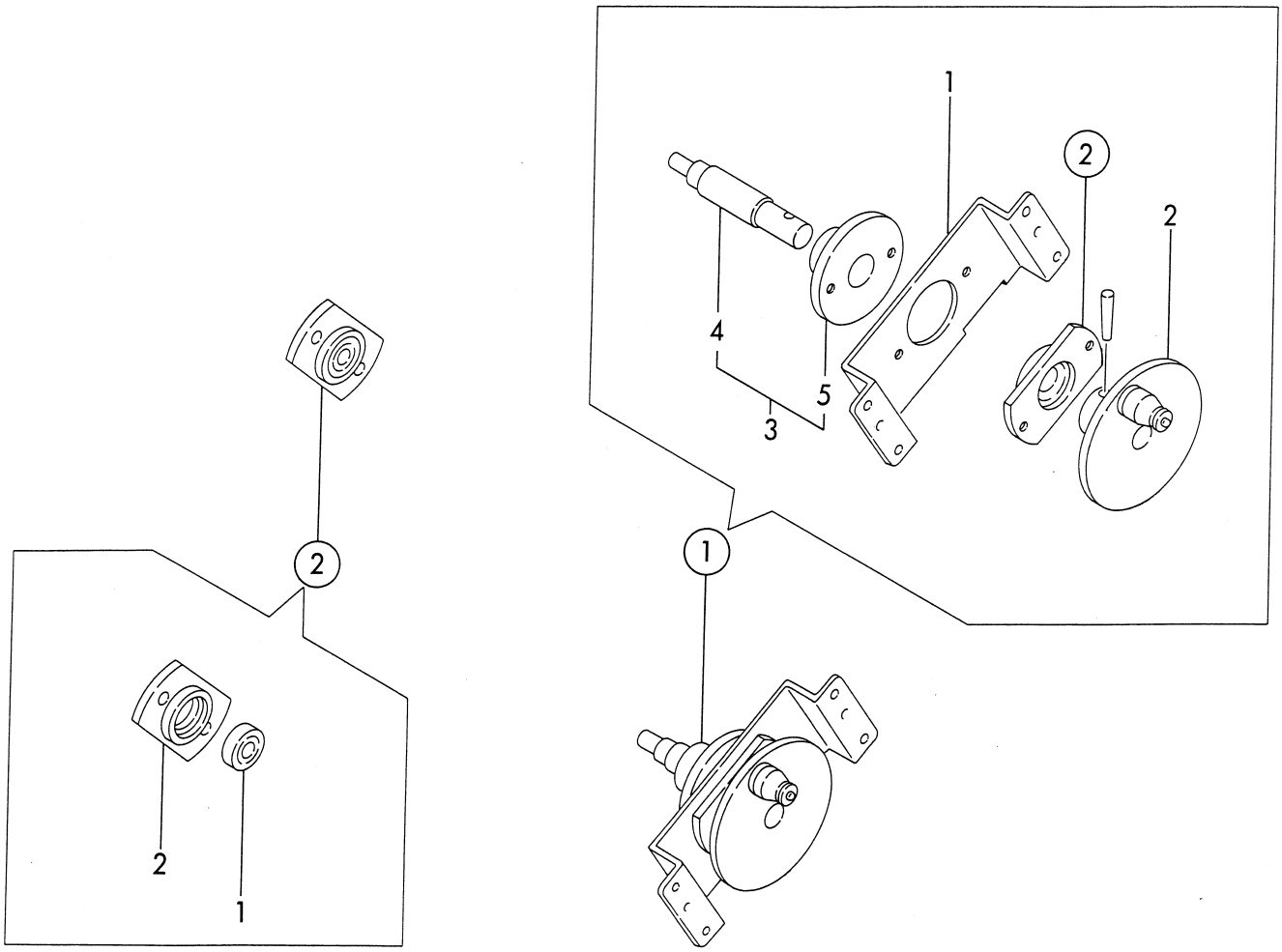

KEY No.	PARTS No.	DESCRIPTION	Q'TY	REMARKS
①	J3-F3011	Driving shaft assy	1	
①-1	NPN	Bracket	1	
①-2	NPN	Driving plate unit	1	
①-3	NPN	Shaft unit	1	
①-4	NPN	Shaft	1	
①-5	NPN	Flange	1	
①-②	E1-A0060	Holder unit	1	
②	E1-A0060	Holder unit	2	
②-1	NPN	Ball bearing	1	
②-2	NPN	Holder	1	

39. Driving Section

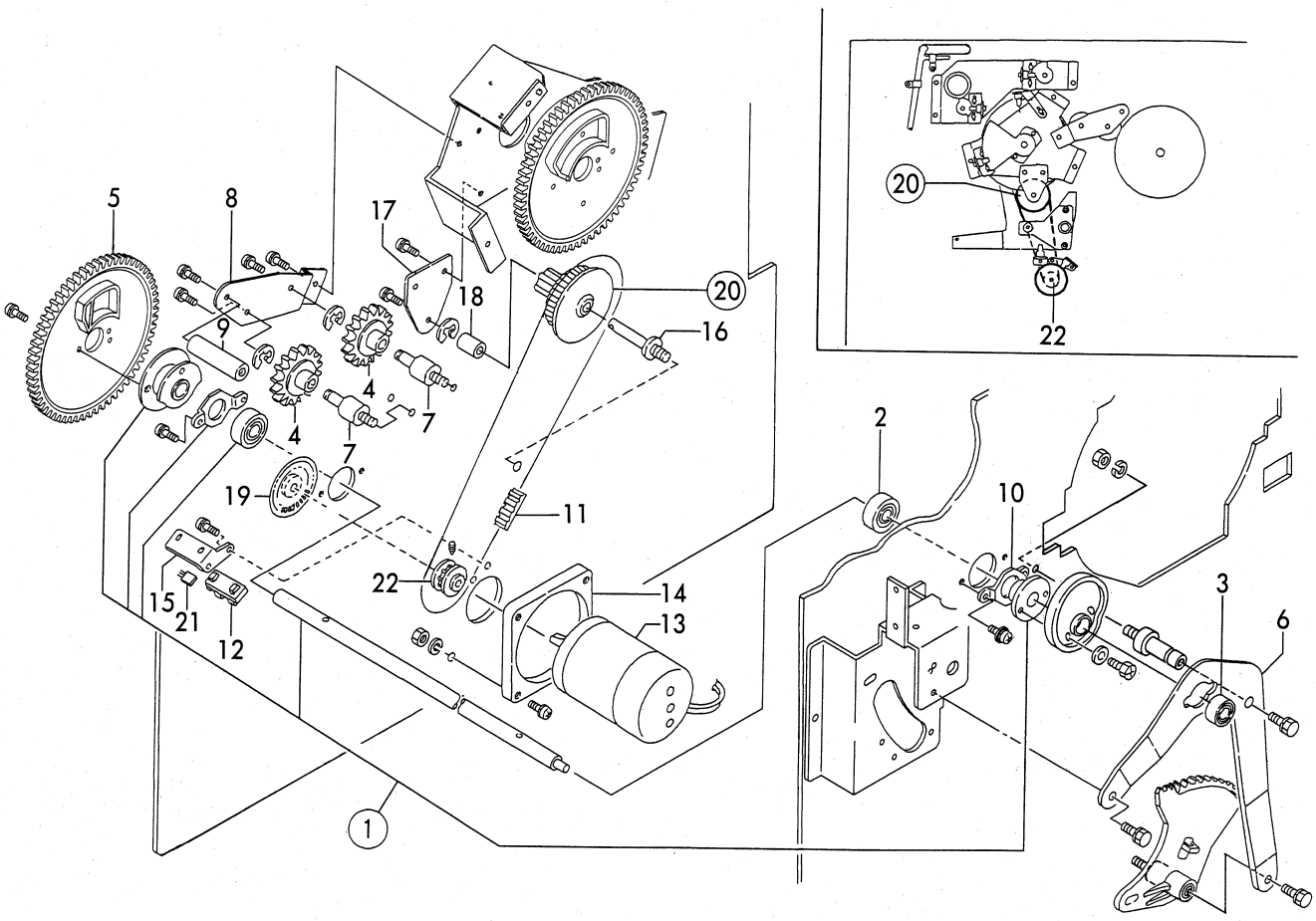

KEY No.	PARTS No.	DESCRIPTION	Q'TY	REMARKS
①	J3-S0012	Handle shaft assy	1	
2	AA003	Ball bearing	1	
3	AA013	Ball bearing	1	
4	E1-41231	Gear	2	
5	J3-F1061	Handle shaft	1	
6	J3-F1072	Reinforcing frame	1	
7	J3-F1080	Shaft	2	
8	J3-F1091	Bracket	1	
9	J3-F1100	Pillar	1	
10	72-41240	Lid	1	
11	AJ013	Timing belt	1	
12	CA003	Photo microsensor	1	
13	F7-81460	Motor	1	
14	E1-50560	Motor base	1	
15	F7-47800	Sensor angle	1	
16	J3-F2010	Shaft	1	
17	J3-F2020	Bracket	1	
18	J8-F2010	Collar	1	
19	J3-F2060	Encoder unit	1	
⑳	J3-F2120	Pulley assy	1	
21	J3-W1120	Encoder cord unit	1	
22	72-42100	Motor pulley unit	1	

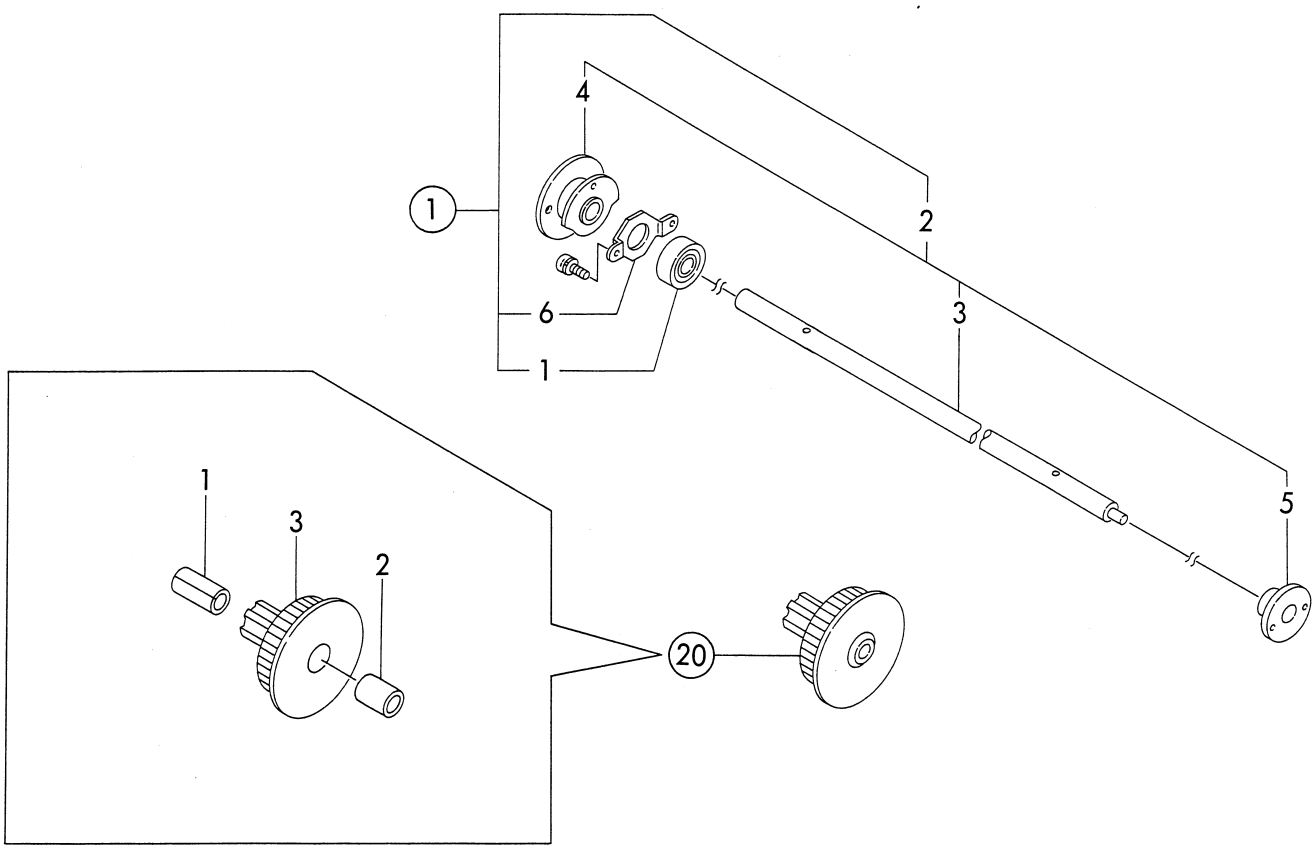

KEY No.	PARTS No.	DESCRIPTION	Q'TY	REMARKS
①	J3-S0012	Handle shaft assy	1	
①-1	AA003	Ball bearing	1	
①-2	L1-F1010	Handle shaft unit	1	
①-3	NPN	Handle shaft	1	
①-4	NPN	Escape-cam unit	1	
①-5	NPN	Flange	1	
①-6	72-41240	Lid	1	
⑳	J3-F2120	Pulley assy	1	
⑳-1	NPN	DU bush	1	
⑳-2	NPN	Bush	1	
⑳-3	NPN	Pulley	1	

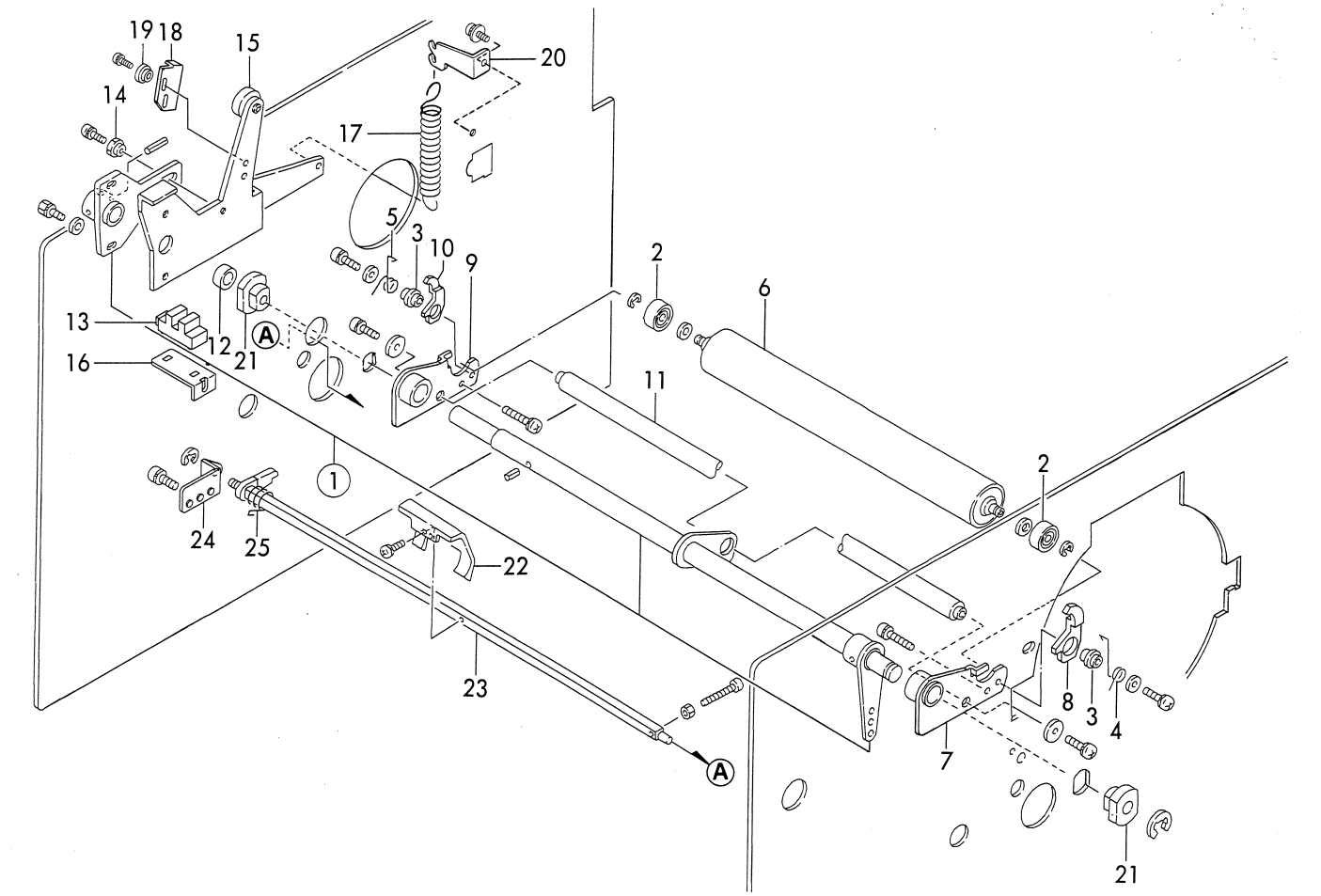

KEY No.	PARTS No.	DESCRIPTION	Q'TY	REMARKS
①	L1-D1011	Shaft unit	1	
2	AA008	Ball bearing	2	
3	C9-26280	Shaft	2	
4	C9-26291	Reverse spring R	1	
5	C9-26371	Reverse spring L	1	
6	J3-D1010	P roll unit	1	
7	L1-D1020	Bracket R unit	1	
8	L1-D1070	Lever R	1	
9	L1-D1050	Bracket L unit	1	
10	L1-D1080	Lever L	1	
11	J3-D1130	Shaft	1	
12	J3-D1140	Collar	1	
13	CA003	Photo microsensor	1	
14	F7-21650	Eccentric shaft	1	
15	J3-D2010	Press lever unit	1	
16	J3-D2030	Sensor bracket	1	
17	J3-D2040	Spring T	1	
18	L1-D2011	Angle	1	
19	Z408022	Z collar	2	
20	L1-D2020	Angle	1	
21	53-28240	Bush	2	
22	C9-26511	Signal lever	1	
23	J3-D3011	Lever shaft unit	1	
24	J3-D3030	Bracket	1	
25	J3-D3050	Spring	1	

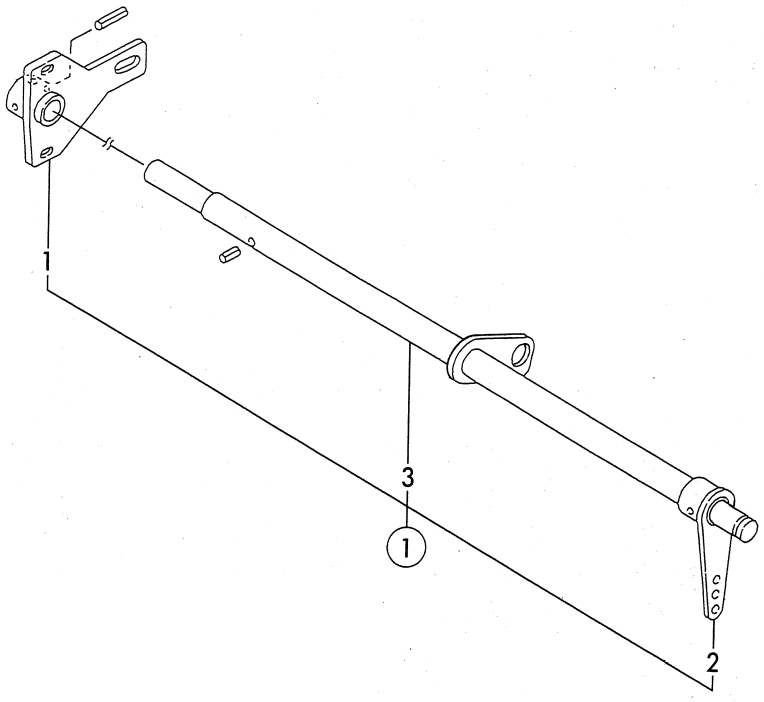

KEY No.	PARTS No.	DESCRIPTION	Q'TY	REMARKS
①	L1-D1011	Shaft unit	1	
①-1	NPN	Flange unit	1	
①-2	NPN	Lever unit	1	
①-3	NPN	Shaft unit	1	

41. Press Section II

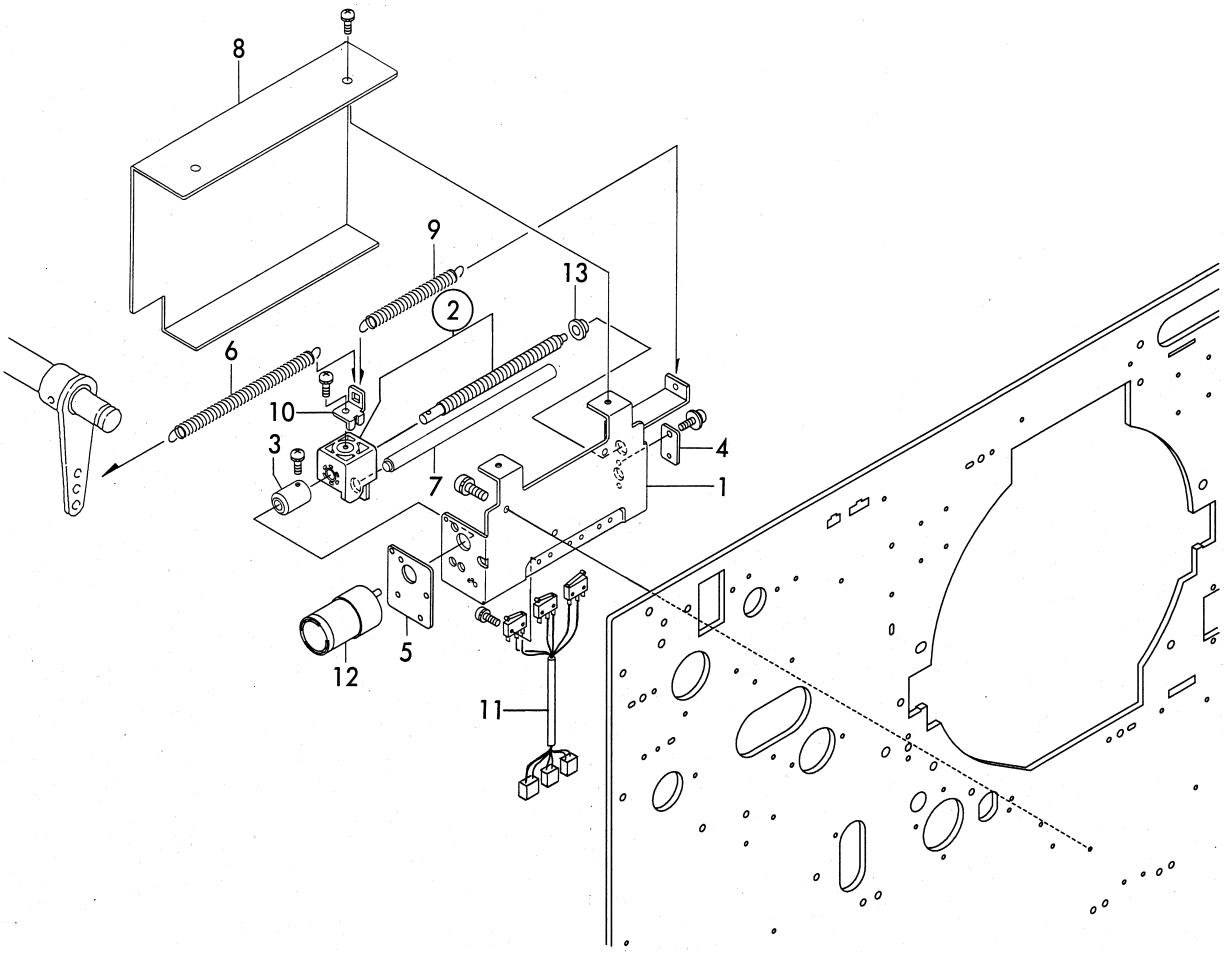

KEY No.	PARTS No.	DESCRIPTION	Q'TY	REMARKS
1	L1-D4012	Base	1	
②	L1-D4150	Trapezoidal screw unit	1	
3	L1-D4051	Joint	1	
4	L1-D4060	Plate	1	
5	L1-D4080	Motor plate	1	
6	L1-D4090	Spring T	1	
7	L1-D4100	Shaft	1	
8	L1-D4111	Cover	1	
9	L1-D4130	Spring T	1	
10	L1-D4140	Angle	1	
11	L1-W1030	Press motor relay cord unit	1	
12	L1-X1080	Motor	1	
13	Z408022	Z collar	1	

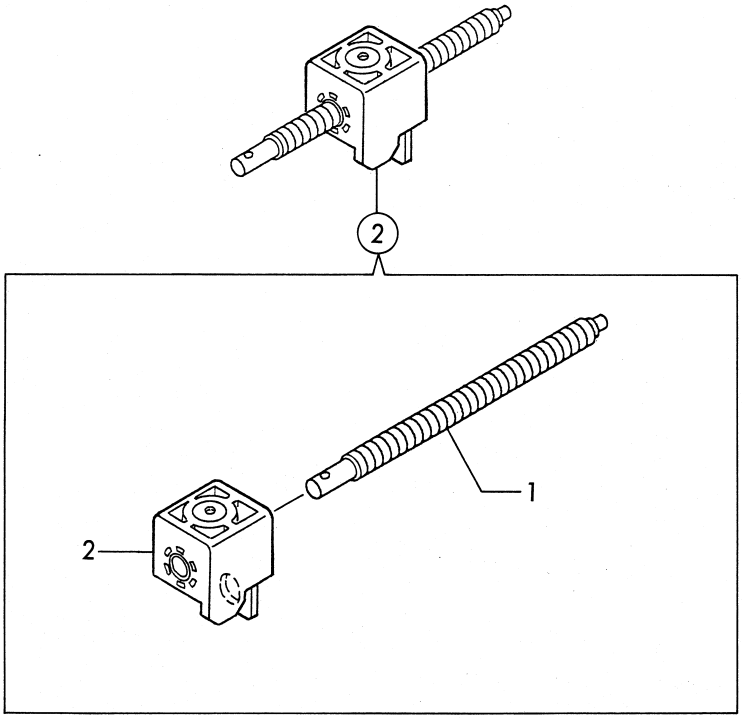

KEY No.	PARTS No.	DESCRIPTION	Q'TY	REMARKS
②	L1-D4150	Trapezoidal screw unit	1	
②-1	NPN	Trapezoidal screw	1	
②-2	NPN	Holder	1	

42. Paper Stripping Section I

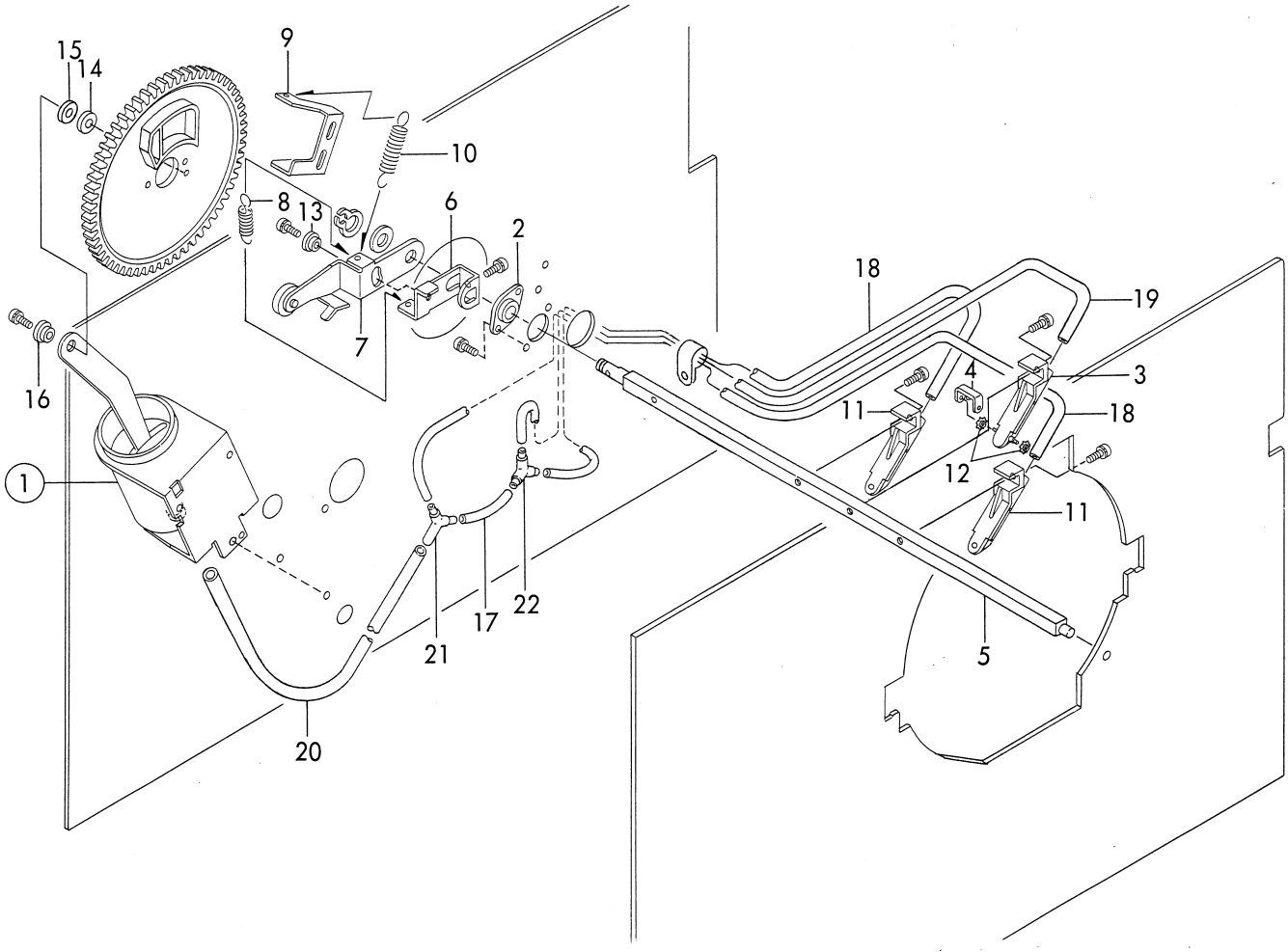

KEY No.	PARTS No.	DESCRIPTION	Q'TY	REMARKS
①	J3-S0014	Paper stripping pump unit	1	
2	J8-H1050	Bush	1	
3	L1-M1010	Paper stripping finger	1	
4	L1-M1020	Clip	1	
5	L1-M1030	Paper stripping shaft	1	
6	L1-M1040	Lever	1	
7	L1-M1050	Lever unit	1	
8	L1-M1090	Spring T	1	
9	L1-M1100	Stopper	1	
10	L1-M1110	Spring T	1	
11	L1-M1120	Paper stripping finger	2	
12	E1-53210	Pulley unit	2	
13	Z408022	Z collar	1	
14	X412030	X collar	1	
15	X412050	X collar	1	
16	Z408031	Z collar	1	
17	F7-46330	Pipe A	1	
18	J3-M1040	Pipe B	2	
19	J3-M1050	Pipe C	1	
20	J3-M1030	Pipe D	1	
21	F7-46370	Three sides connecter A	1	
22	F7-46380	Three sides connecter	1	

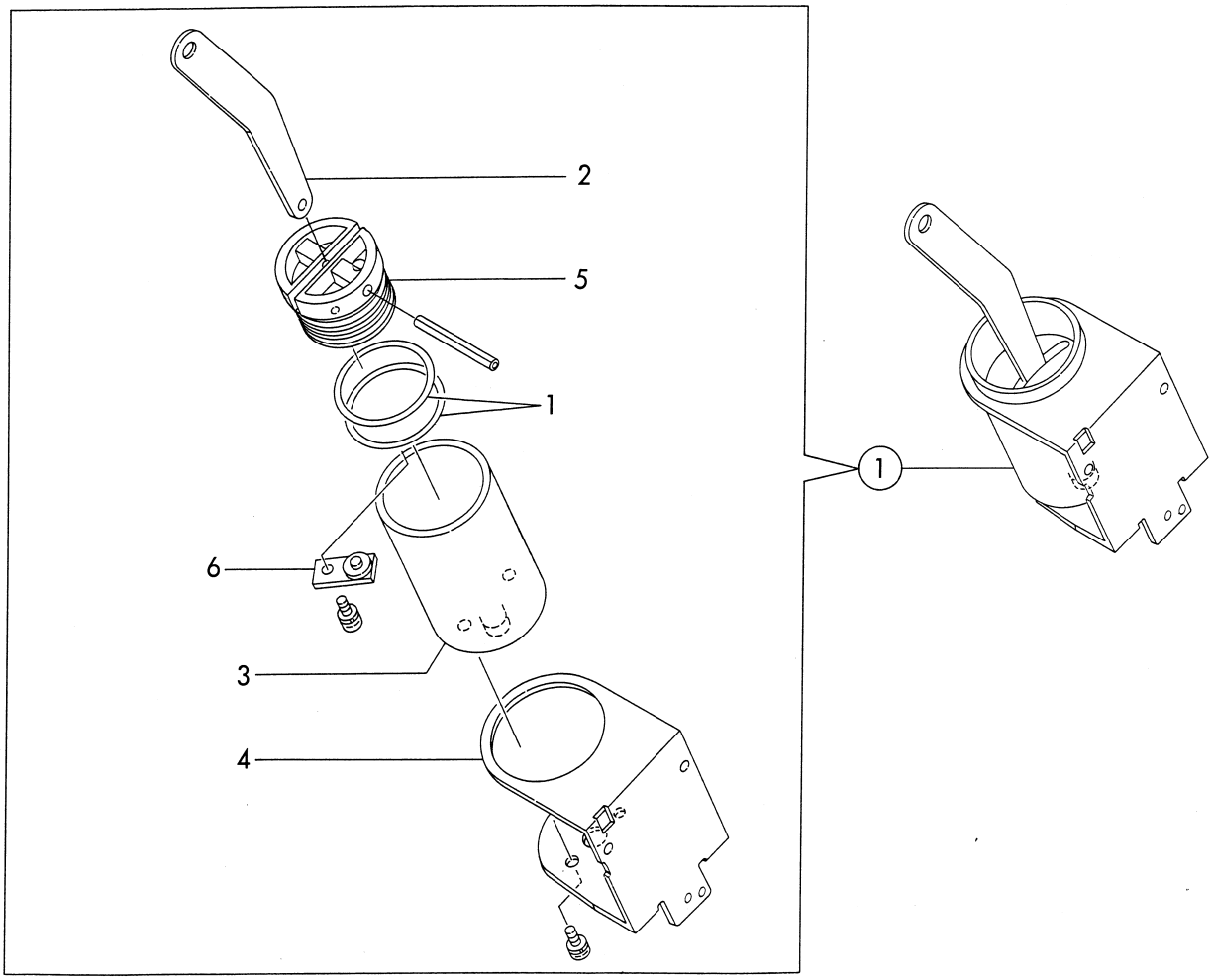

KEY No.	PARTS No.	DESCRIPTION	Q'TY	REMARKS
①	J3-S0014	Paper stripping pump unit	1	
①-1	EA008	O-ring	2	
①-2	J3-M2020	Link	1	
①-3	J3-M2030	Cylinder	1	
①-4	J3-M2070	Bracket	1	
①-5	J3-M2080	Piston	1	
①-6	3E-51270	Valve unit	1	

43. Paper Stripping Section II

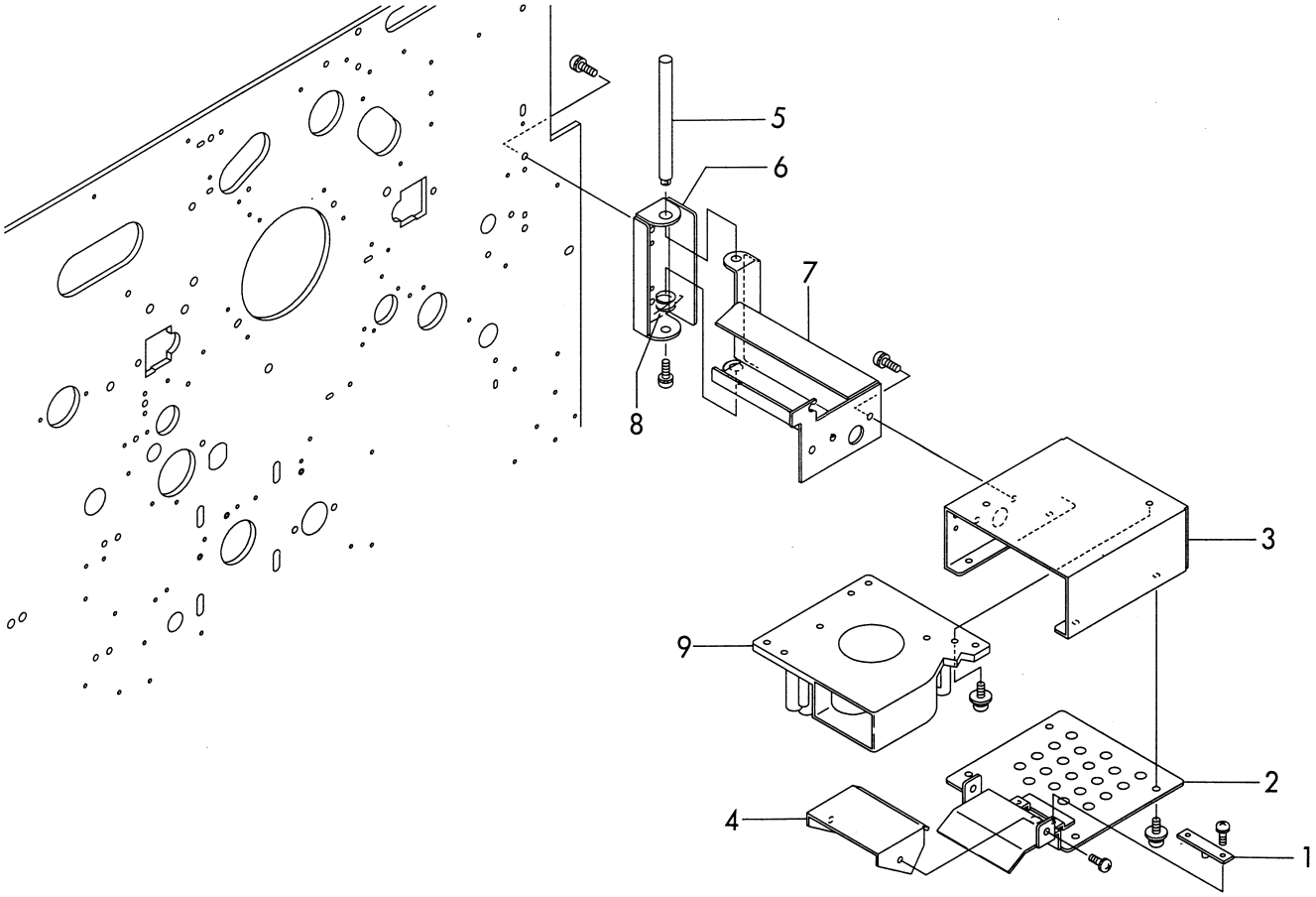

KEY No.	PARTS No.	DESCRIPTION	Q'TY	REMARKS
1	L1-V3200	Light-emitting P.C.B	1	
2	L1-M3010	Fan cover unit	1	
3	L1-M3030	Fan cover	1	
4	L1-M3050	Cover	1	
5	L1-M3060	Shaft	1	
6	L1-M3070	Hinge base	1	
7	L1-M3081	Bracket	1	
8	L1-M3090	Spring	1	
9	L1-X1020	Fan	1	

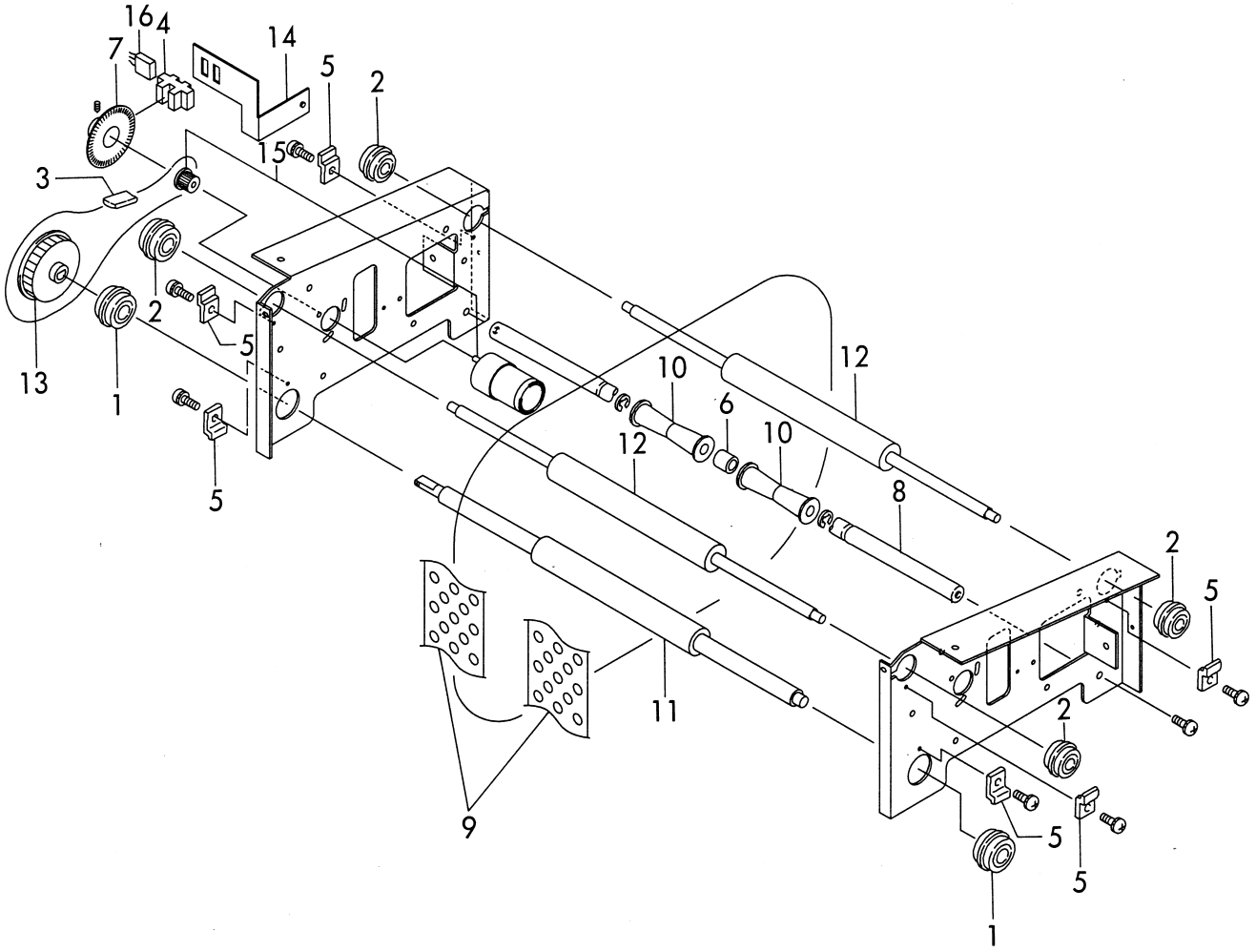

KEY No.	PARTS No.	DESCRIPTION	Q'TY	REMARKS
1	AA005	Ball bearing	2	
2	AA008	Ball bearing	4	
3	AJ084	Timing belt	1	
4	CA003	Photo microsensor	1	
5	C6-53650	Angle	6	
6	F7-46620	Roller	1	
7	J3-F2060	Encoder unit	1	
8	J3-H1070	Shaft	1	
9	J3-H1170	Flat belt	2	
10	J3-H1200	Pulley assy	2	
11	L1-H1030	Driving roller	1	
12	L1-H1040	Subsidiary roller	2	
13	L1-H1130	Timing pulley	1	
14	L1-H1170	Sensor bracket	1	
15	L1-X1050	Motor	1	
16	J3-W1120	Encoder cord unit	1	

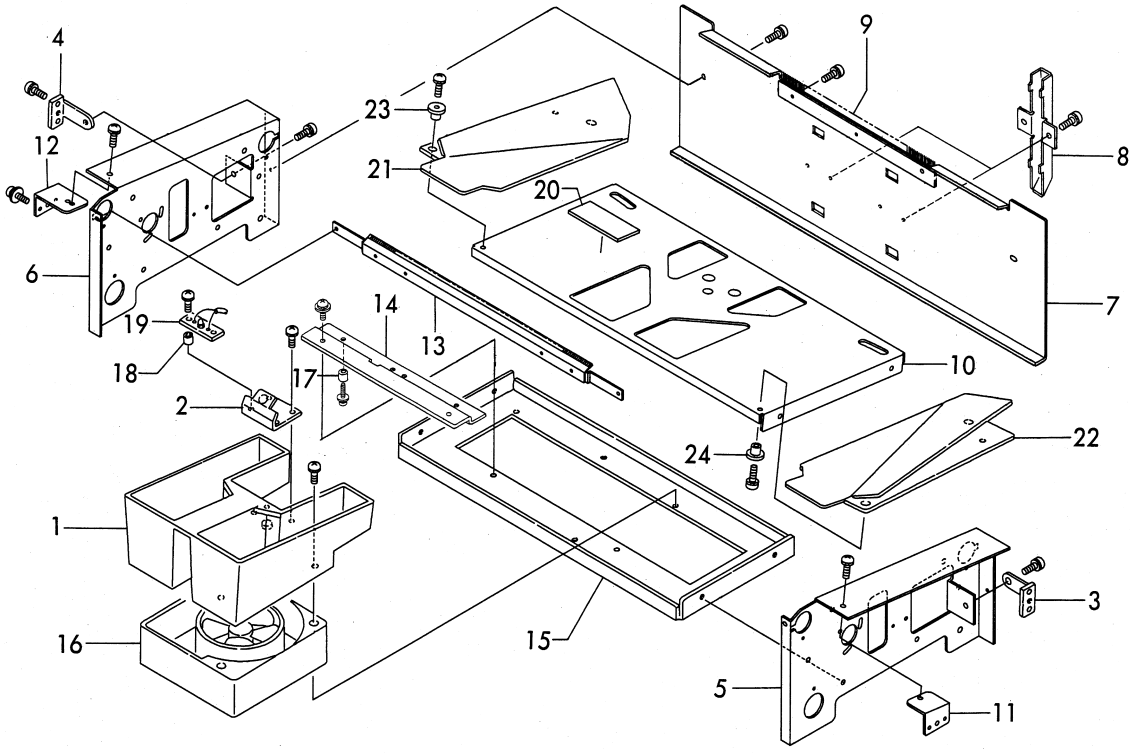

KEY No.	PARTS No.	DESCRIPTION	Q'TY	REMARKS
1	J3-H1091	Fan cover	1	
2	J3-H1101	Sensor bracket	1	
3	J3-H1140	Angle R	1	
4	J3-H1150	Angle L	1	
5	L1-H1010	Frame R	1	
6	L1-H1020	Frame L	1	
7	L1-H1060	Cover	1	
8	L1-H1070	Lib	2	
9	L1-H1080	Brush	1	
10	L1-H1090	Bracket	1	
11	L1-H1100	Angle R	1	
12	L1-H1110	Angle L	1	
13	L1-H1140	Guide assy	1	
14	L1-H1190	Bracket	1	
15	L1-H1200	Reinforcing plate	1	
16	L1-X1010	Fan	1	
17	XB004	Pillar	4	
18	XB012	Pillar	2	
19	72-88750	Light-receiving P.C.B	1	
20	J3-H2110	Magnet	2	
21	L1-H2070	Jump plate R unit	1	
22	L1-H2090	Jump plate L unit	1	
23	Z408022	Z collar	2	
24	Z408031	Z collar	2	

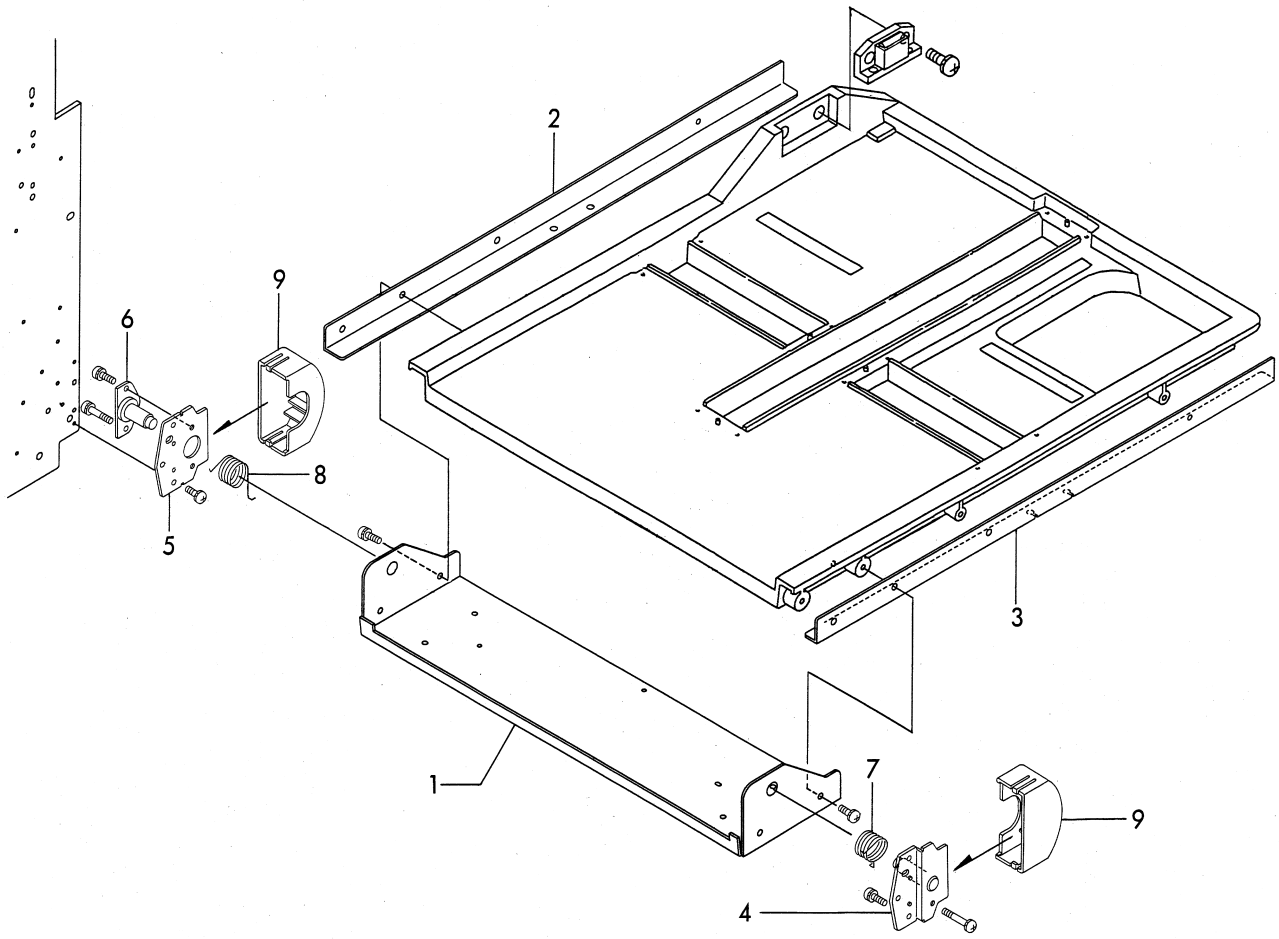

KEY No.	PARTS No.	DESCRIPTION	Q'TY	REMARKS
1	L1-J1061	Bracket	1	
2	L1-J1071	Angle R	1	
3	L1-J1081	Angle L	1	
4	L1-J1240	Bracket unit	1	
5	L1-J1260	Plate	1	
6	L1-J1162	Plate unit	1	
7	L1-J1220	Reverse spring R	1	
8	L1-J1230	Reverse spring L	1	
9	L1-J1270	Cover	2	

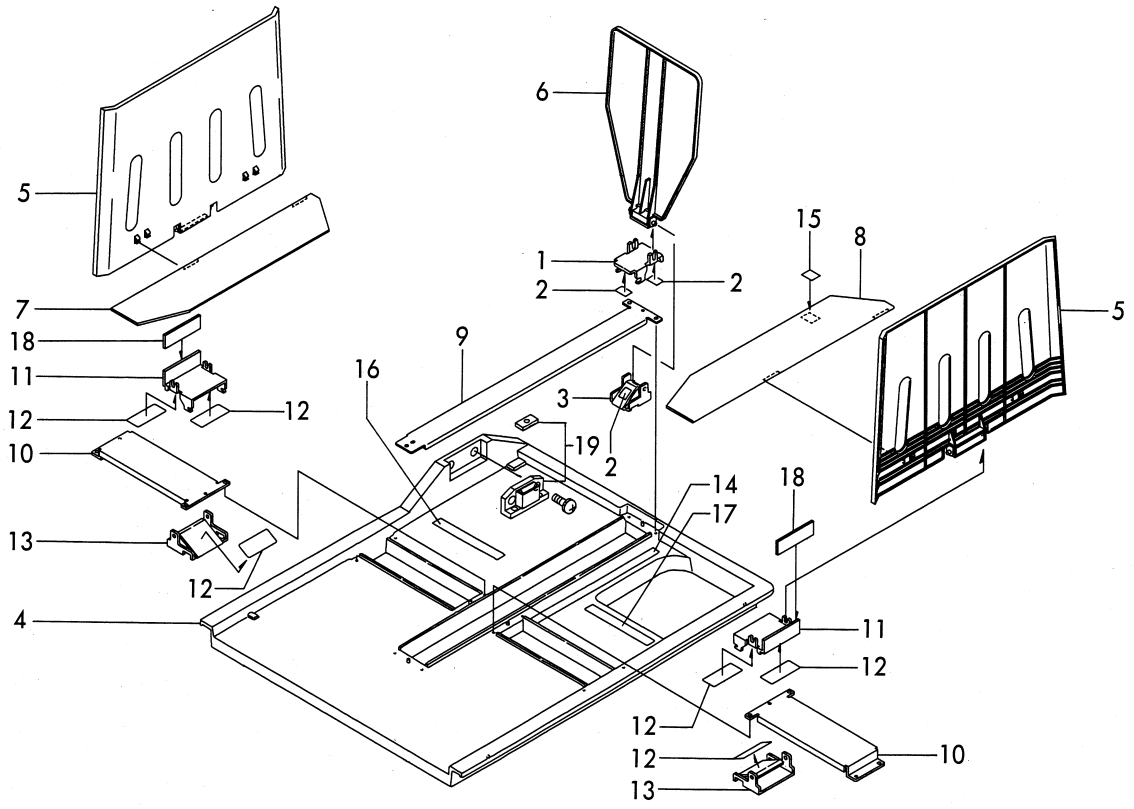

KEY No.	PARTS No.	DESCRIPTION	Q'TY	REMARKS
1	J3-J1080	Slide	1	
2	J3-J1110	Tape	3	
3	J3-J1260	Plate spring	1	
4	L1-J1010	Raper receiver plate	1	
5	L1-J1020	Guide	2	
6	L1-J1030	Stopper	1	
7	L1-J1040	Guide R	1	
8	L1-J1050	Guide L	1	
9	L1-J1110	Guide rail	1	
10	L1-J1120	Guide rail	2	
11	L1-J1130	Slide	2	
12	L1-J1140	Tape	6	
13	L1-J1150	Plate spring	2	
14	L1-T1091	Label	1	D,EA
	L1-T4040	Label	1	EI
15	L1-T1100	Label	1	D,EA
16	L1-T1110	Label	1	D,EA
	L1-T4050	Label	1	EI
17	L1-T1120	Label	1	D,EA
	L1-T4060	Label	1	EI
18	L1-J1190	Knob	2	
19	DA111	Magnet catch	1	

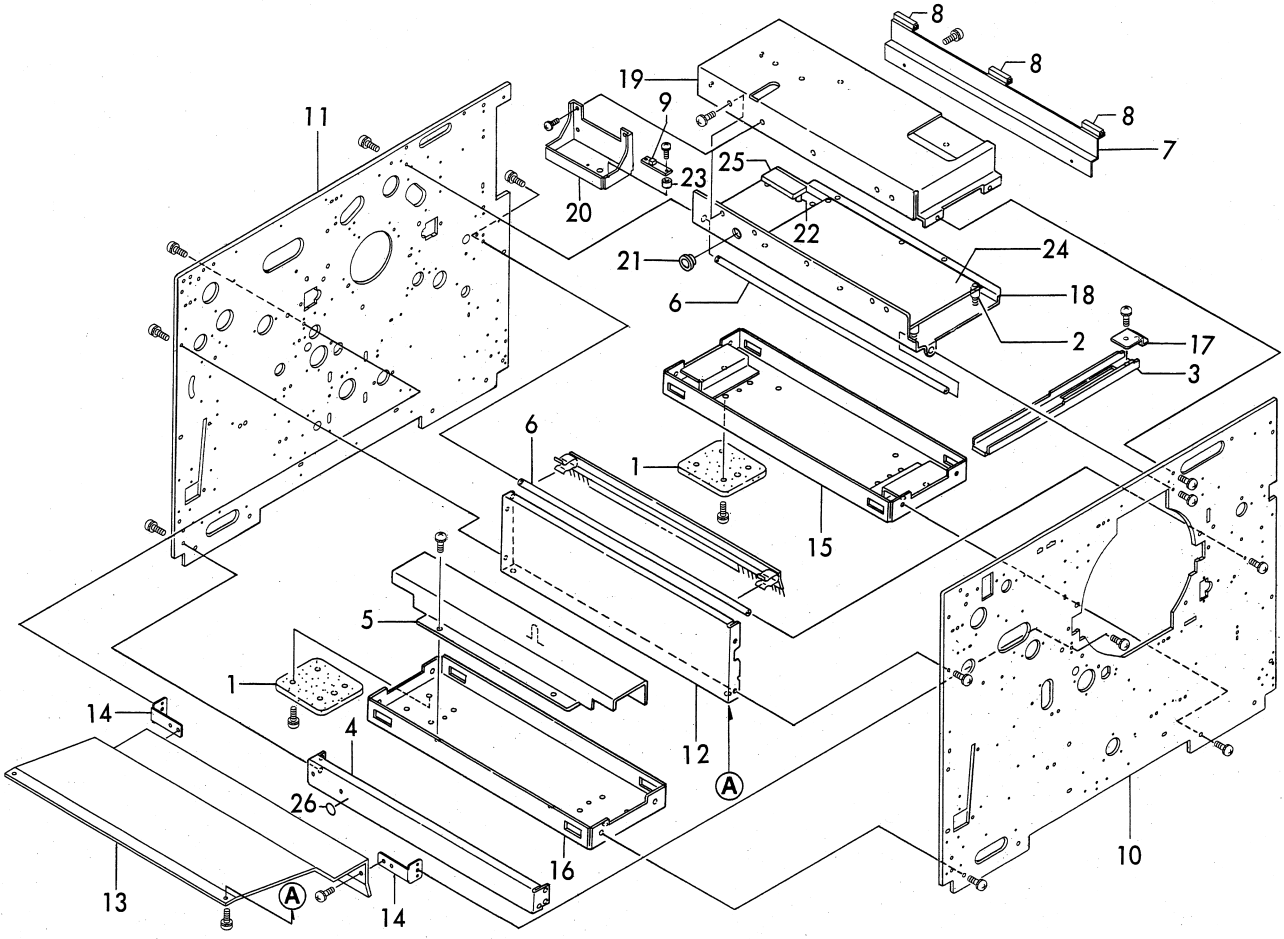

KEY No.	PARTS No.	DESCRIPTION	Q'TY	REMARKS
1	F7-21710	Rubber plate	4	
2	J2-F1111	Spacer	6	
3	J3-K1050	Grip	4	
4	J3-K1071	Side cover	1	
5	J3-K1090	Cover	1	
6	J3-K1120	Reinforcing stay	2	
7	J3-K1150	Bracket	1	
8	J3-K1160	Sponge	4	
9	J3-V3440	End- mark P.C.B 2 unit	1	
10	L1-K1010	Frame R	1	
11	L1-K1020	Frame L	1	
12	L1-K1030	Side cover	1	
13	L1-K1041	Cover	1	
14	L1-K1050	Angle	2	
15	L1-K1060	Reinforcing plate A	1	
16	L1-K1070	Reinforcing plate B	1	
17	L1-K1080	Stopper	4	
18	J3-K1510	Board case	1	
19	J3-K1520	Cover	1	
20	L1-K1530	Sensor bracket	1	
21	XB001	Bush	1	
22	XB011	Spacer	2	
23	XB012	Pillar	2	
24	L1-V3380	Main P.C.B unit	1	
25	L5-V3350	Battery board unit `98	1	
26	F4-60300	Label	1	D

49. Frame II

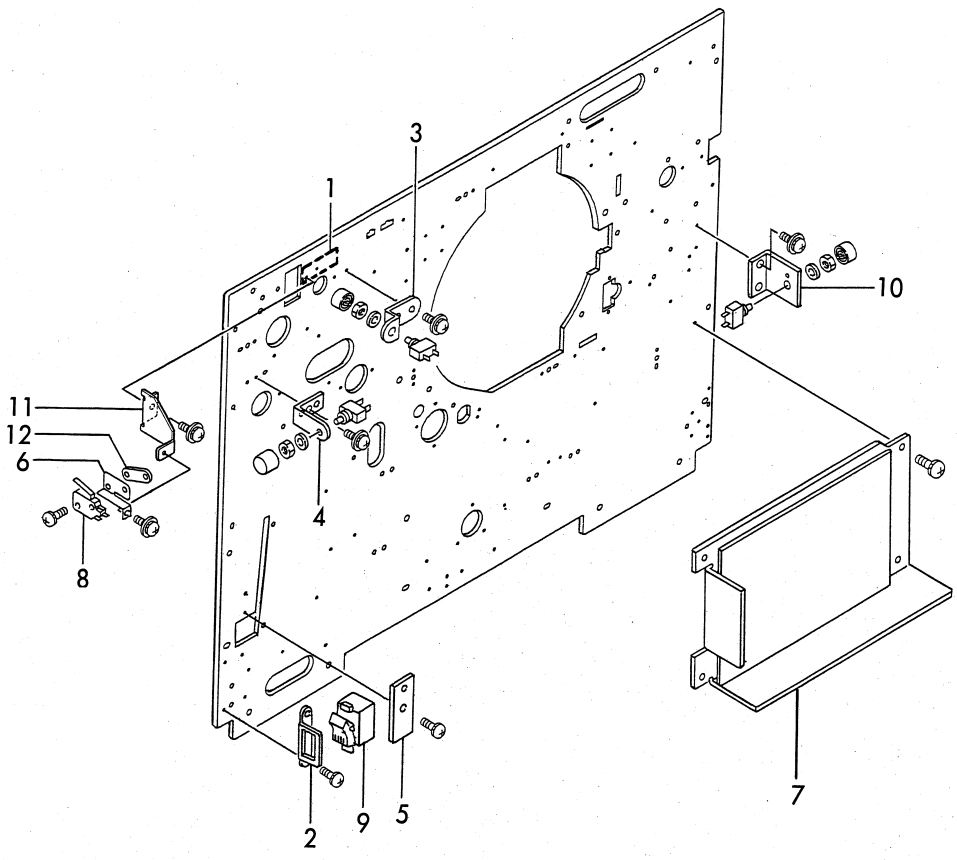

KEY No.	PARTS No.	DESCRIPTION	Q'TY	REMARKS
1	E1-52050	Label,MASTER FEED BUTTON	1	D
	E1-79040	Label,MASTER FEED BUTTON	1	EA,EI
2	E1-50190	Switch base	1	
3	L1-K1560	Switch angle	1	
4	J3-K2011	Switch angle	1	
5	J3-K2030	Plate	1	
6	J3-K2060	Plate spring	1	
7	J3-X1010	Power supply	1	100V,120V
	J3-X1020	Power supply	1	230V
8	LA005	Micro switch	1	
9	LC011	Power switch	1	
10	L1-K2010	Switch angle	1	
11	L1-K2030	Bracket	1	
12	26-22651	Screw plate	1	

50. Frame III

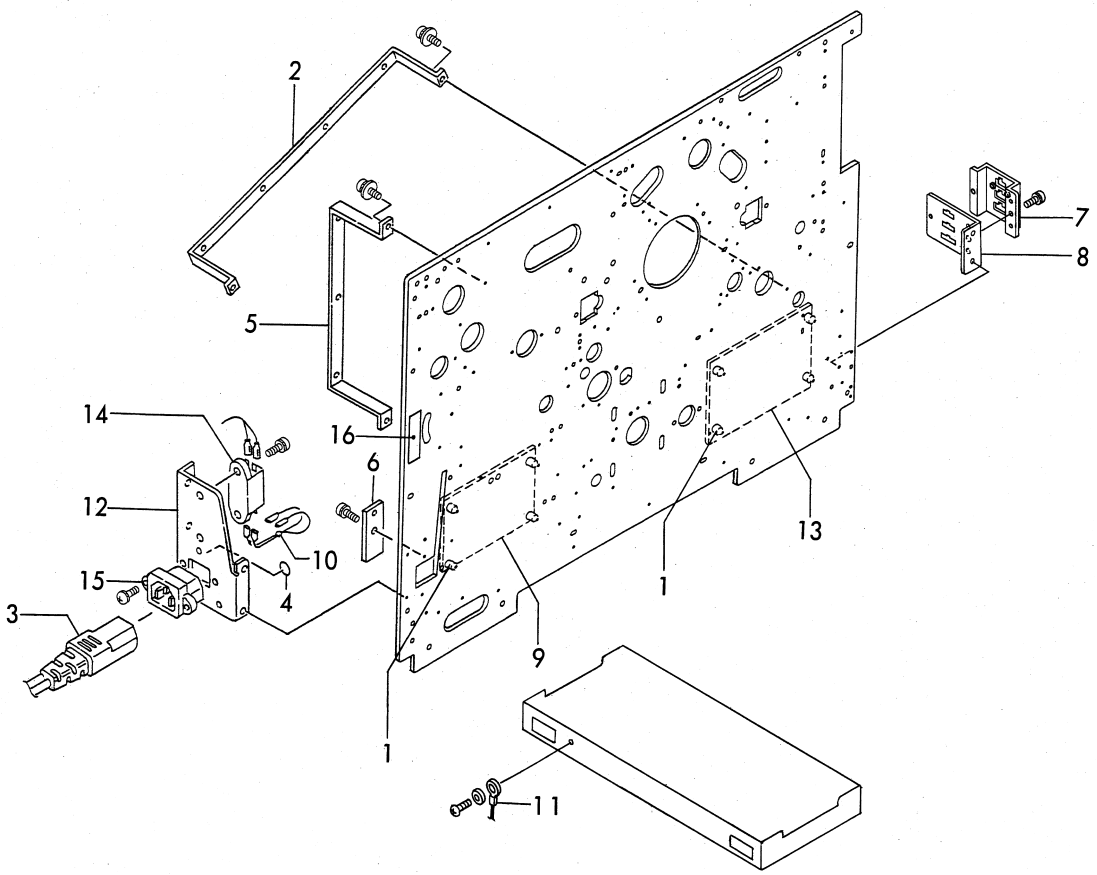

KEY No.	PARTS No.	DESCRIPTION	Q'TY	REMARKS
1	72-89800	Spacer	8	
2	E1-51141	Frame brace	1	
3	C6-89200	Power cord	1	D
	E1-81080	Power cord	1	120V
	E1-81270	Power cord	1	230V
4	F4-60300	Label,EARTH	1	
5	J3-K2020	Frame brace	1	
6	J3-K2030	Plate	1	
7	J3-K2041	Connector bracket	1	
8	J3-K2070	Connector cover	1	
9	L5-V3150	Motor P.C.B unit	1	
10	J3-W1150	Filter cord unit	1	
11	J3-W2050	Groound Line	1	D
12	L1-K2020	Filter angle	1	
13	L1-V3410	Drive P.C.B unit	1	
14	UK006	Noise filter	1	
15	WE003	Inlet	1	
16	019-0599	Label,feed pressure	1	D
	E1-79050	Label,feed pressure	1	EA,EI

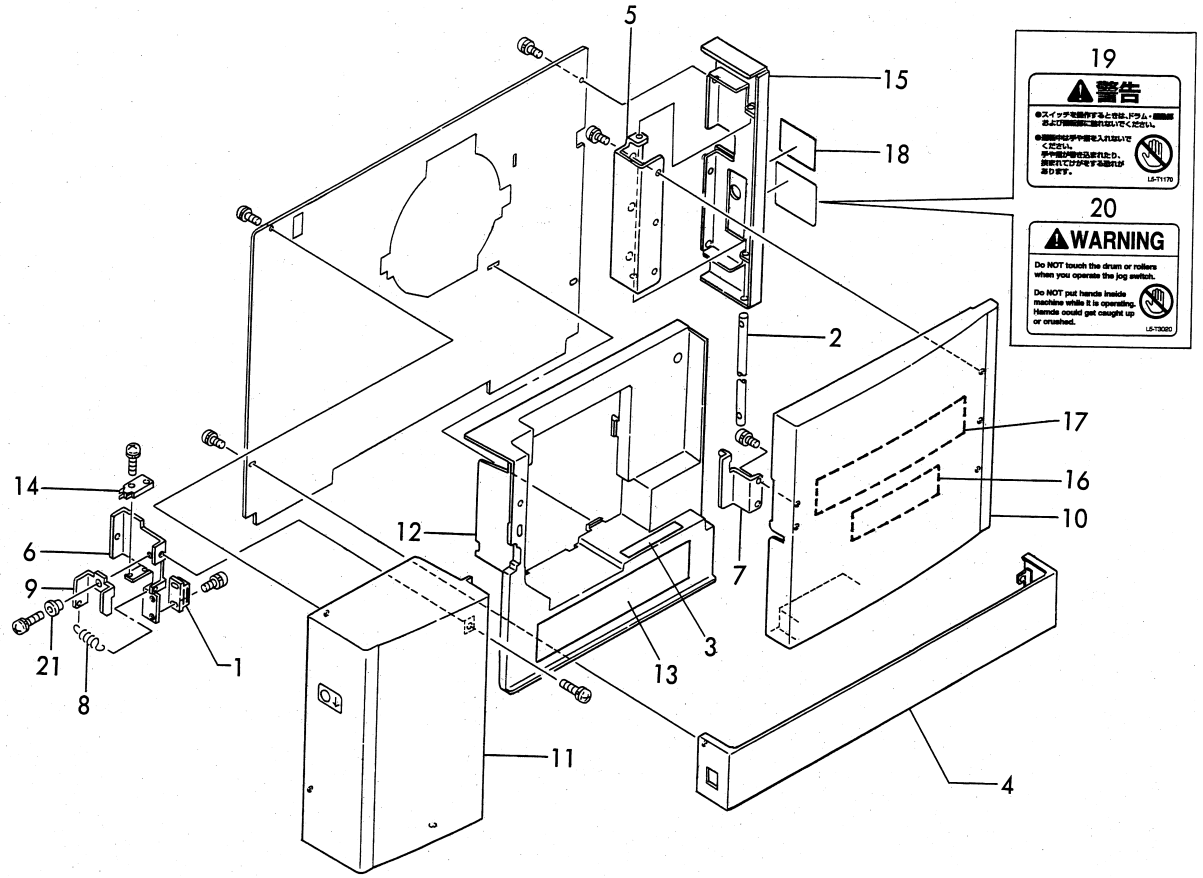

KEY No.	PARTS No.	DESCRIPTION	Q'TY	REMARKS
1	DA059	Magnet catch	1	
2	E1-50380	Shaft	1	
3	E1-52580	Label,DRUM	1	D
	E1-79250	Label,DRUM	1	EA,EI
4	J3-K3030	Cover C unit	1	
5	J3-K3070	Hinge	1	
6	J3-K3080	Bracket A	1	
7	J3-K3090	Plate	1	
8	J3-K3140	Spring T	1	
9	J3-K3150	Lever	1	
10	J3-K3160	Cover A	1	
11	J3-K3180	Cover B unit	1	
12	J3-K3190	Inner cover	1	
13	J3-T1110	Label,INK PACK	1	D
	J3-T3060	Label,INK PACK	1	EA,EI
14	LA003	Micro switch	1	
15	L1-K3010	Cover D unit	1	
16	L1-T1380	Label,DIP SWITCH 1	1	
17	L1-T2130	Label,HELP	1	
18	L1-T1070	Indication label	1	D
	L1-T3040	Indication label	1	EA,EI
19	L5-T1170	Label,WARNING 2	1	D
20	L5-T3020	Label,WARNING 2	1	EA,EI
21	Z408022	Z collar	1	

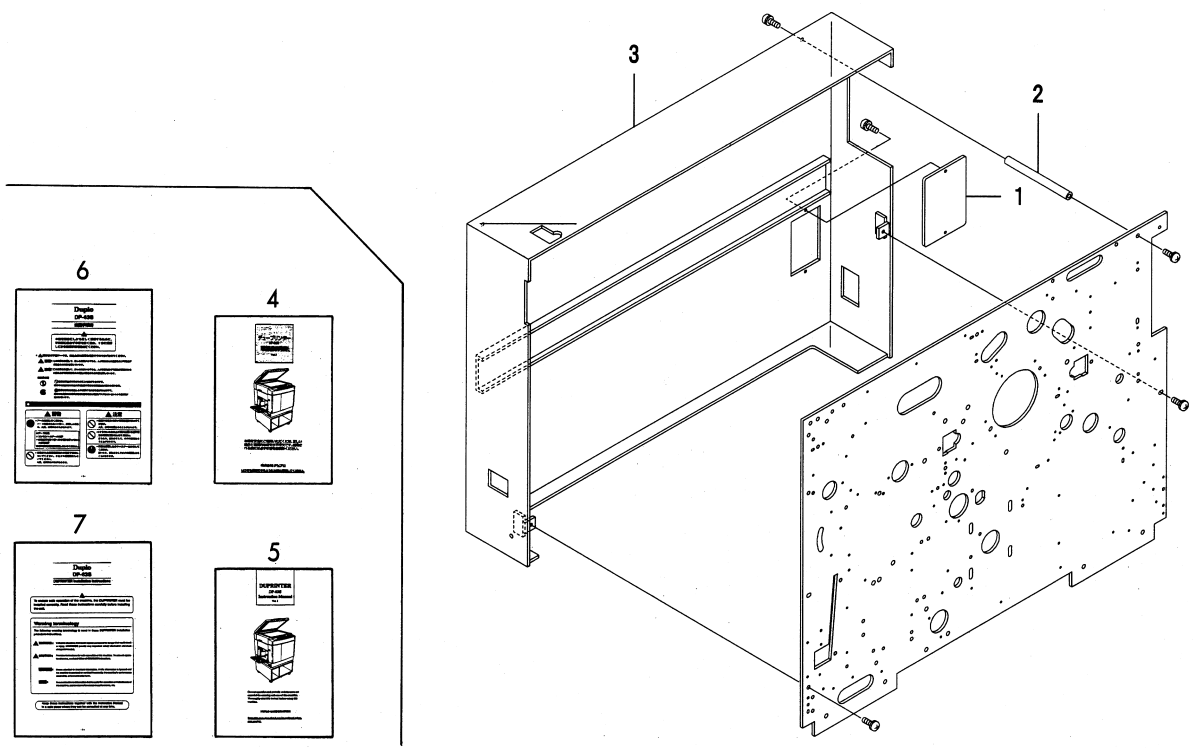

KEY No.	PARTS No.	DESCRIPTION	Q'TY	REMARKS
1	J3-K4030	Cover F	1	
2	L1-K4020	Pillar	2	
3	L1-K4010	Cover E unit	1	
4	L1-Y1280	Instruction Manual	1	D
5	L1-Y1270	Instruction Manual	1	EA,EI
6	L1-Y1300	Installation Instructions	1	D
7	L1-Y1290	Installation Instructions	1	EA,EI

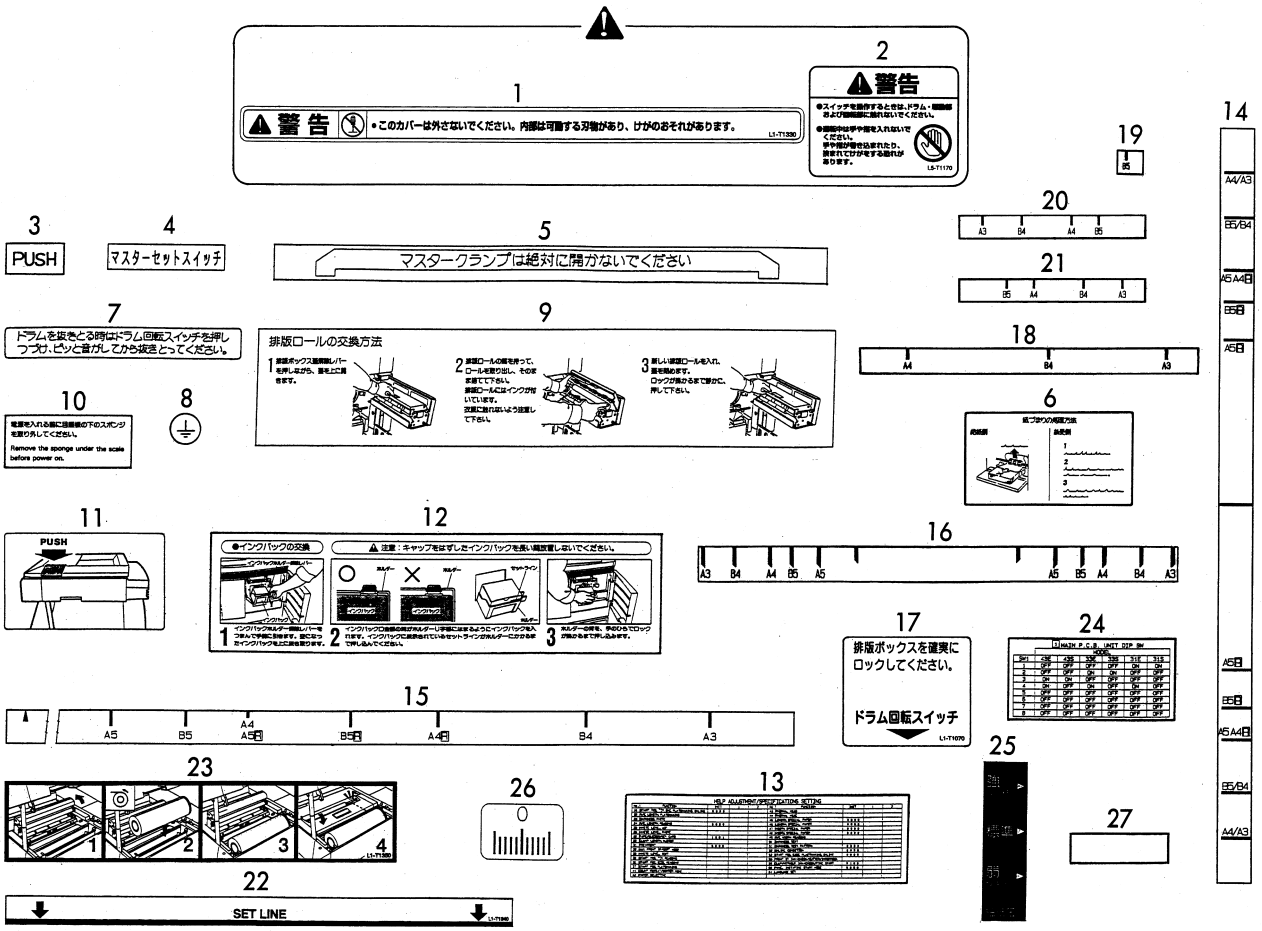

KEY No.	PARTS No.	DESCRIPTION	Q'TY	REMARKS
1	L1-T1330	Label,WARNING 1	1	D
2	L5-T1170	Label,WARNING 2	1	D
3	C9-59300	Label,PUSH	3	D,EA,EI
4	E1-52050	Label,MASTER FEED BUTTON	1	D
5	E1-52560	Label,CAUTION	1	D
6	E1-52571	Label,CAUTION(JAM)	1	D
7	E1-52580	Label,DRUM	1	D
8	F4-60300	Label,EARTH	1	D
9	J3-T1030	Label,MASTER EJECTION CORE	1	D
10	J3-T1090	Precaution label	1	D,EA,EI
11	J3-T1100	Label,PUSH(TOP COVER)	1	D,EA,EI
12	J3-T1110	Label,INK PACK	1	D
13	J3-T1160	Label,HELP	1	
14	L1-T1040	Label,SIZE(VERTICAL)	1	D,EA
15	L1-T1050	Label,SIZE(HORIZONTAL)	1	D,EA
16	L1-T1060	Label,SIZE	1	D,EA
17	L1-T1070	Indication label	1	D
18	L1-T1091	Label,SIZE	1	D,EA
19	L1-T1100	Label,SIZE	1	D,EA
20	L1-T1110	Label,SIZE	1	D,EA
21	L1-T1120	Label,SIZE	1	D,EA
22	L1-T1340	Label,SET LINE	1	D,EA,EI
23	L1-T1350	Label,DIRECTION	1	D,EA,EI
24	L1-T1380	Label,DIP SWITCH 1	1	D,EA,EI
25	019-0599	Label,FEED PRESSURE	1	D
26	J3-T1010	Print position scale label	1	D,EA,EI
27	L1-T1360	Label,DP-63S	1	D,EA,EI

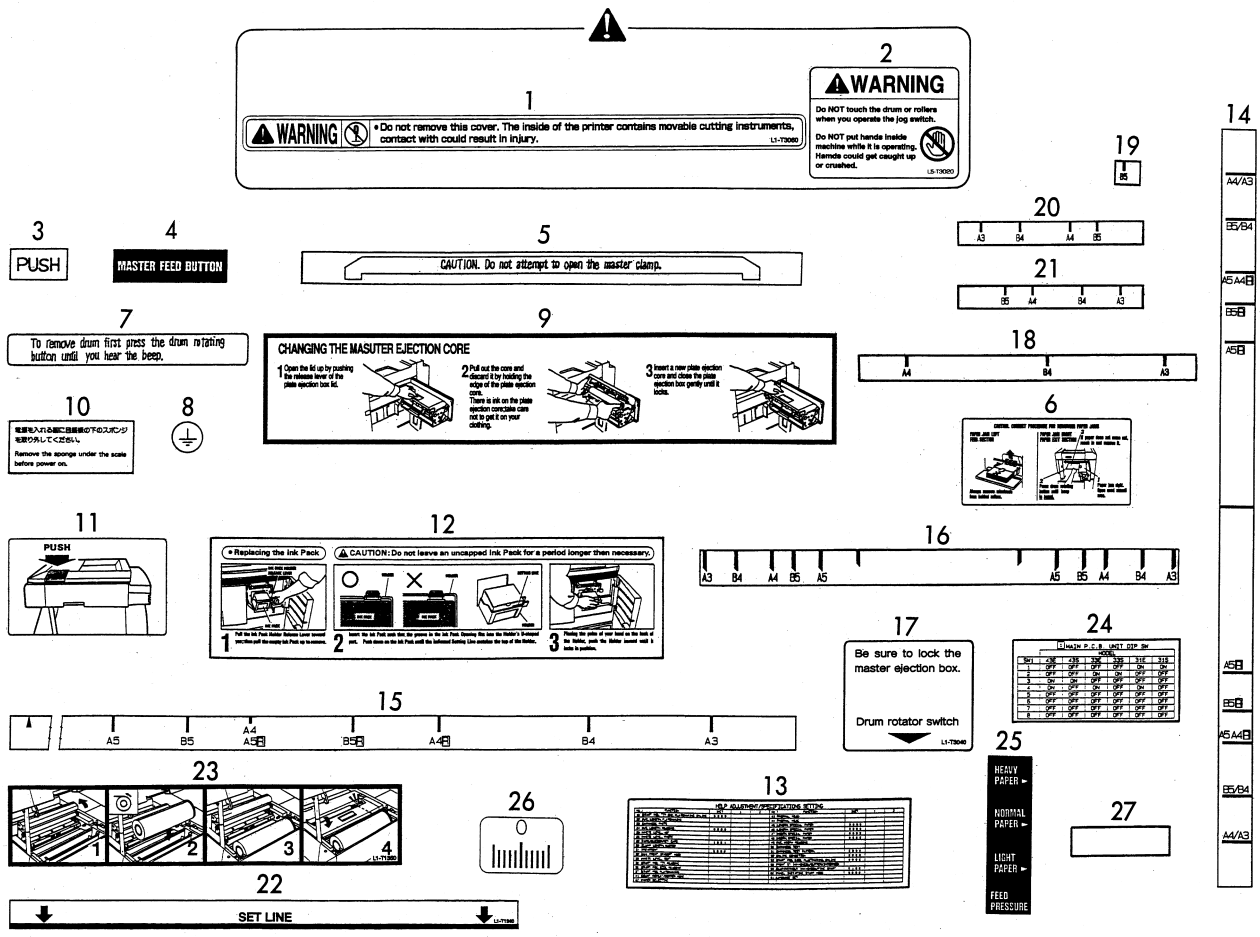

KEY No.	PARTS No.	DESCRIPTION	Q'TY	REMARKS
1	L1-T3060	Label,WARNING 1	1	EA,EI
2	L5-T3020	Label,WARNING 2	1	EA,EI
3	C9-59300	Label,PUSH	3	D,EA,EI
4	E1-79040	Label,MASTER FEED BUTTON	1	EA,EI
5	E1-79230	Label,CAUTION	1	EA,EI
6	E1-79241	Label,CAUTION(JAM)	1	EA,EI
7	E1-79250	Label,DRUM	1	EA,EI
8	F4-60300	Label,EARTH	1	120V,230V
9	J3-T3010	Label,MASTER EJECTION CORE	1	EA,EI
10	J3-T1090	Precaution label	1	D,EA,EI
11	J3-T1100	Label,PUSH(TOP COVER)	1	D,EA,EI
12	J3-T3060	Label,INK PACK	1	EA,EI
13	J3-T1160	Label,HELP	1	
14	L1-T1040	Label,SIZE(VERTICAL)	1	D,EA
15	L1-T1050	Label,SIZE(HORIZONTAL)	1	D,EA
16	L1-T1060	Label,SIZE	1	EI
17	L1-T3040	Indication label	1	EA,EI
18	L1-T1091	Label,SIZE	1	D,EA
19	L1-T1100	Label,SIZE	1	D,EA
20	L1-T1110	Label,SIZE	1	D,EA
21	L1-T1120	Label,SIZE	1	D,EA
22	L1-T1340	Label,SET LINE	1	D,EA,EI
23	L1-T1350	Label,DIRECTION	1	D,EA,EI
24	L1-T1380	Label,DIP SWITCH 1	1	D,EA,EI
25	E1-79050	Label,FEED PRESSURE	1	EA,EI
26	J3-T1010	Print position scale label	1	D,EA,EI
27	L1-T1360	Label,DP-63S	1	D,EA,EI

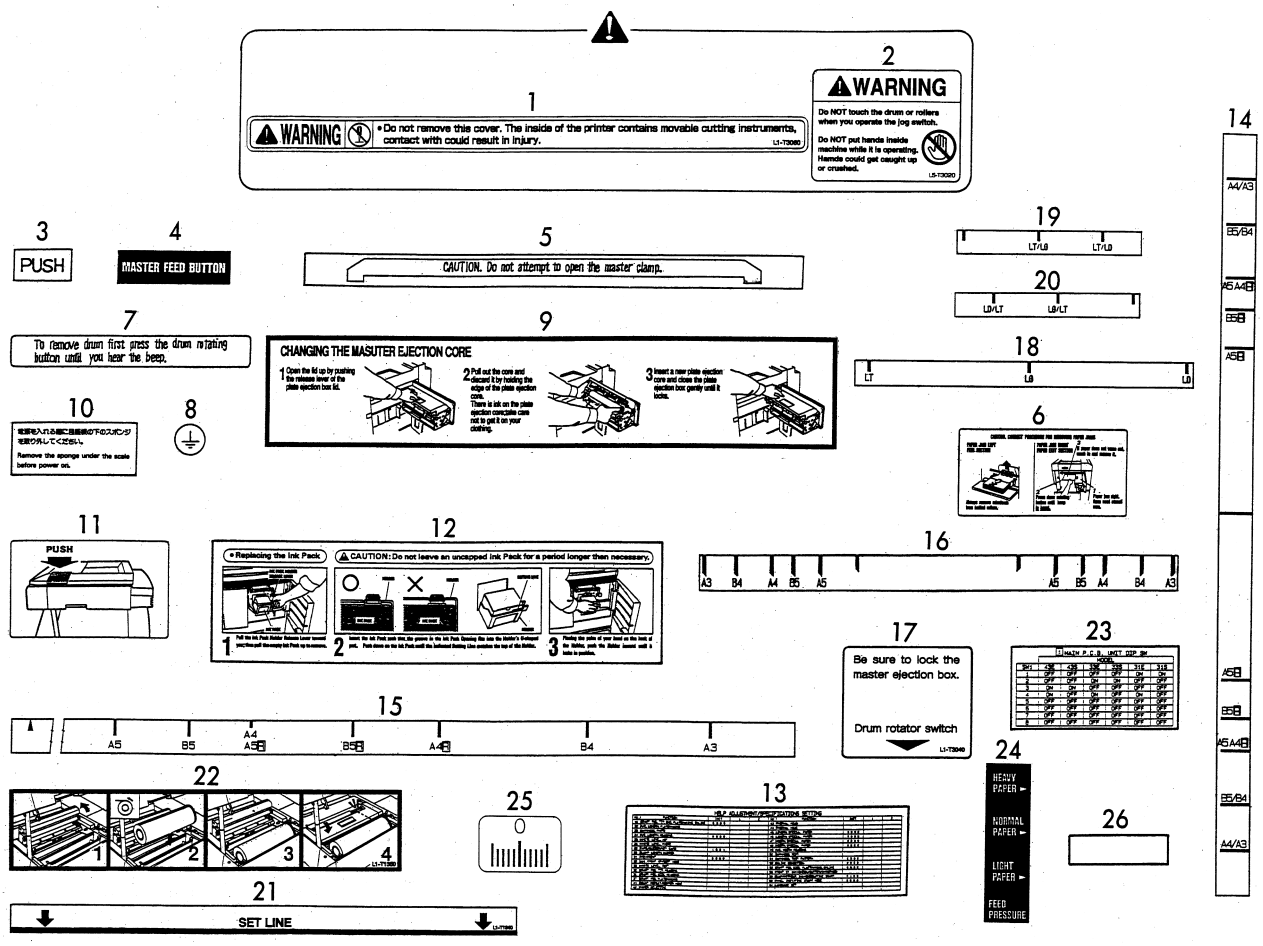

KEY No.	PARTS No.	DESCRIPTION	Q'TY	REMARKS
1	L1-T3060	Label,WARNING 1	1	EA,EI
2	L5-T3020	Label,WARNING 2	1	EA,EI
3	C9-59300	Label,PUSH	3	D,EA,EI
4	E1-79040	Label,MASTER FEED BUTTON	1	EA,EI
5	E1-79230	Label,CAUTION	1	EA,EI
6	E1-79241	Label,CAUTION(JAM)	1	EA,EI
7	E1-79250	Label,DRUM	1	EA,EI
8	F4-60300	Label,EARTH	1	120V,230V
9	J3-T3010	Label,MASTER EJECTION CORE	1	EA,EI
10	J3-T1090	Precaution label	1	D,EA,EI
11	J3-T1100	Label,PUSH(TOP COVER)	1	D,EA,EI
12	J3-T3060	Label,INK PACK	1	EA,EI
13	J3-T1160	Label,HELP	1	
14	L1-T4010	Label,SIZE(VERTICAL)	1	EI
15	L1-T4020	Label,SIZE(HORIZONTAL)	1	EI
16	L1-T4030	Label,SIZE	1	EI
17	L1-T3040	Indication label	1	EA,EI
18	L1-T4040	Label,SIZE	1	EI
19	L1-T4050	Label,SIZE	1	EI
20	L1-T4060	Label,SIZE	1	EI
21	L1-T1340	Label,SET LINE	1	D,EA,EI
22	L1-T1350	Label,DIRECTION	1	D,EA,EI
23	L1-T1380	Label,DIP SWITCH 1	1	D,EA,EI
24	E1-79050	Label,FEED PRESSURE	1	EA,EI
25	J3-T1010	Print position scale label	1	D,EA,EI
26	L1-T1360	Label,DP-63S	1	D,EA,EI

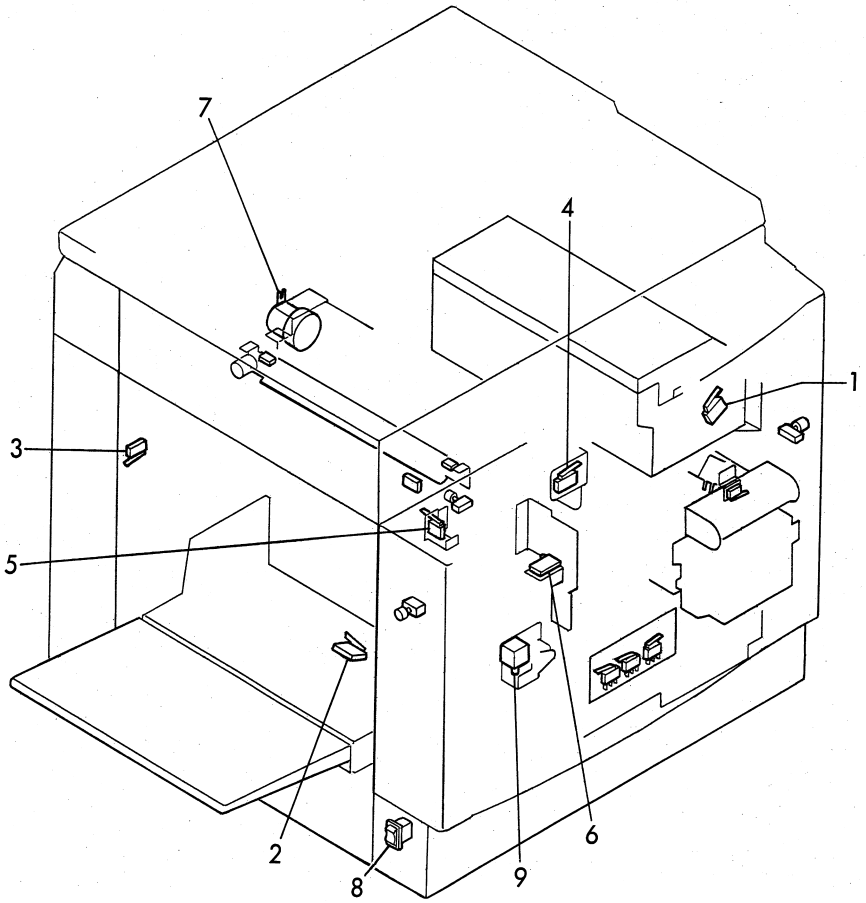

KEY No.	PARTS No.	DESCRIPTION	Q'TY	REMARKS
1	LA005	Micro switch	1	
2	LA005	Micro switch	1	
3	LA005	Micro switch	1	
4	LA003	Micro switch	1	
5	LA005	Micro switch	1	
6	LA003	Micro switch	1	
7	J3-X1040	Master feed clutch	1	
8	LC011	Power switch	1	
9	72-89620	Solenoid	1	

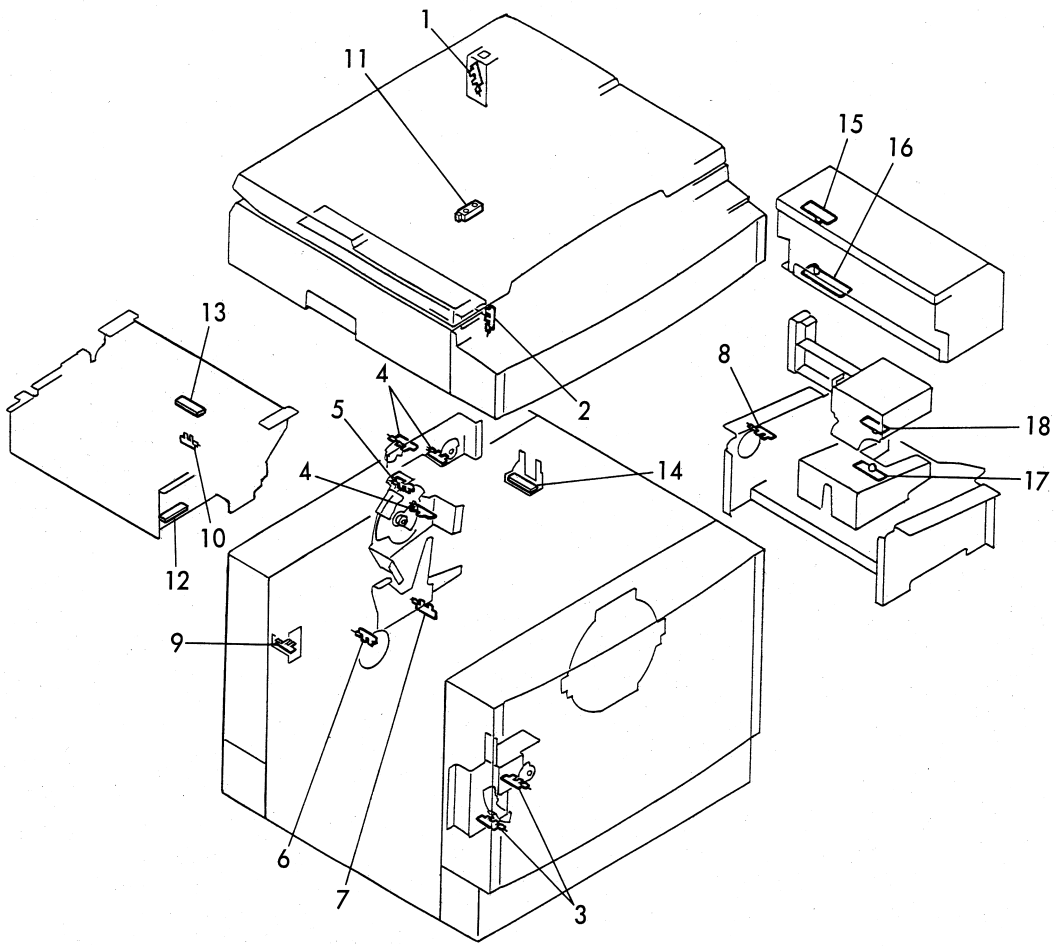

KEY No.	PARTS No.	DESCRIPTION	Q'TY	REMARKS
1	CA003	Photo microsensor	1	
2	CA003	Photo microsensor	1	
3	CA003	Photo microsensor	2	
4	CA003	Photo microsensor	3	
5	CA003	Photo microsensor	1	
6	CA003	Photo microsensor	1	
7	CA003	Photo microsensor	1	
8	CA003	Photo microsensor	1	
9	CA003	Photo microsensor	1	
10	CA003	Photo microsensor	1	
11	CA018	Manuscript sensor	1	
12	J8-V3230	End-mark P.C.B unit	1	
13	J8-V3230	End-mark P.C.B unit	1	
14	J3-V3440	End-mark P.C.B 2 unit	1	
15	E1-88501	Light-receiving P.C.B	1	
16	J8-V3190	Light-emitting P.C.B	1	
17	L1-V3200	Light-emitting P.C.B	1	
18	72-88750	Light-receiving P.C.B	1	

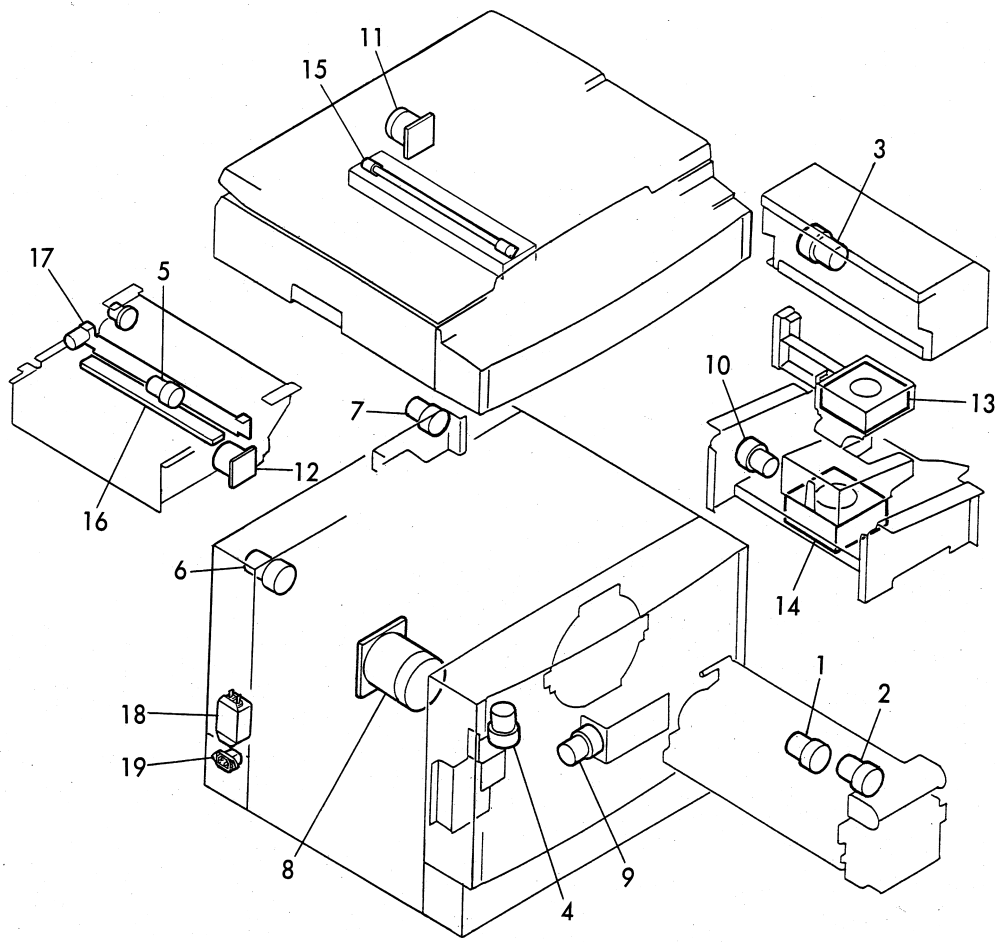

KEY No.	PARTS No.	DESCRIPTION	Q'TY	REMARKS
1	J8-X1130	Motor	1	
2	L1-X1070	Motor	1	
3	L1-X1080	Motor	1	
4	J8-X1110	Motor	1	
5	J8-X1110	Motor	1	
6	E1-82080	Motor	1	
7	E1-82080	Motor	1	
8	F7-81460	Motor	1	
9	F7-81060	Motor	1	
10	L1-X1050	Motor	1	
11	J2-X1010	Stepping motor	1	
12	J3-X1050	Stepping motor	1	
13	L1-X1020	Fan	1	
14	L1-X1010	Fan	1	
15	J2-X1040	Lamp assy	1	
16	J3-X1210	Thermal head	1	
17	L1-X1100	Cutter unit	1	
18	UK006	Noise filter	1	
19	WE003	Inlet	1	

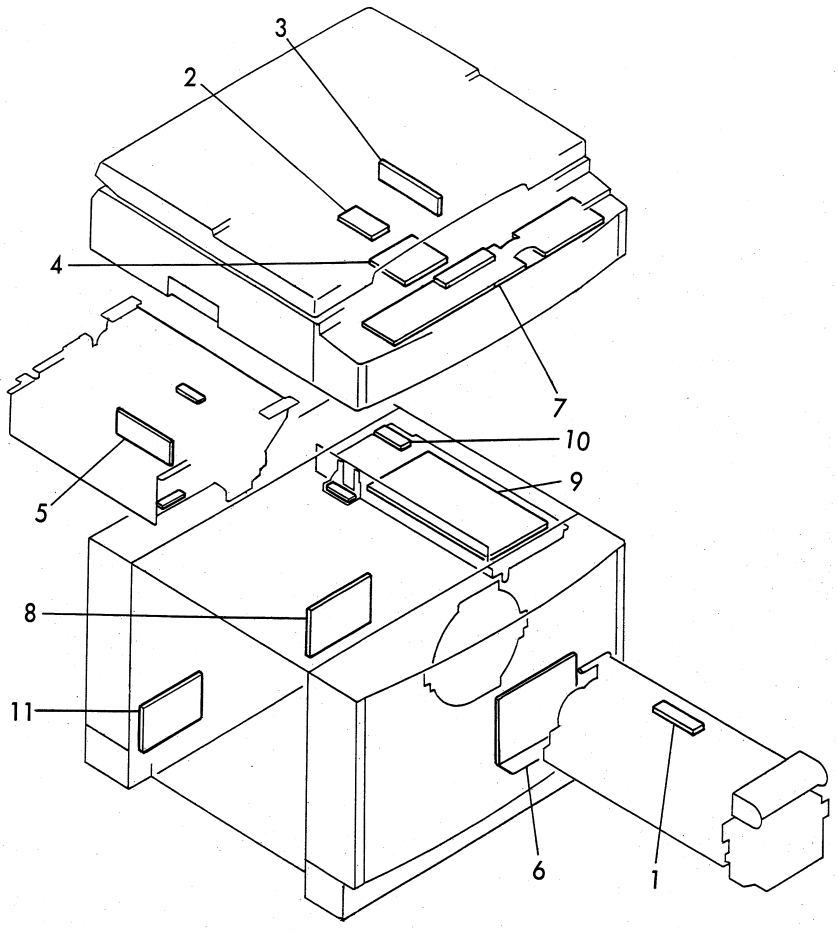

KEY No.	PARTS No.	DESCRIPTION	Q'TY	REMARKS
1	F7-88800	Ink detecting PCB unit	1	
2	J2-X1050	Inverter assy	1	
3	J3-V3361	CCD P.C.B unit	1	
4	J3-V3030	A/D P.C.B unit	1	
5	J3-V3380	Thermal head P.C.B unit	1	
6	J3-X1010	Power supply	1	D,120V
	J3-X1020	Power supply	1	230V
7	L1-V3011	Control panel P.C.B. unit	1	
8	L1-V3410	Drive P.C.B unit	1	
9	L1-V3380	Main P.C.B unit	1	
10	L5-V3350	Battery board unit `98	1	
11	L5-V3150	Motor P.C.B unit	1	

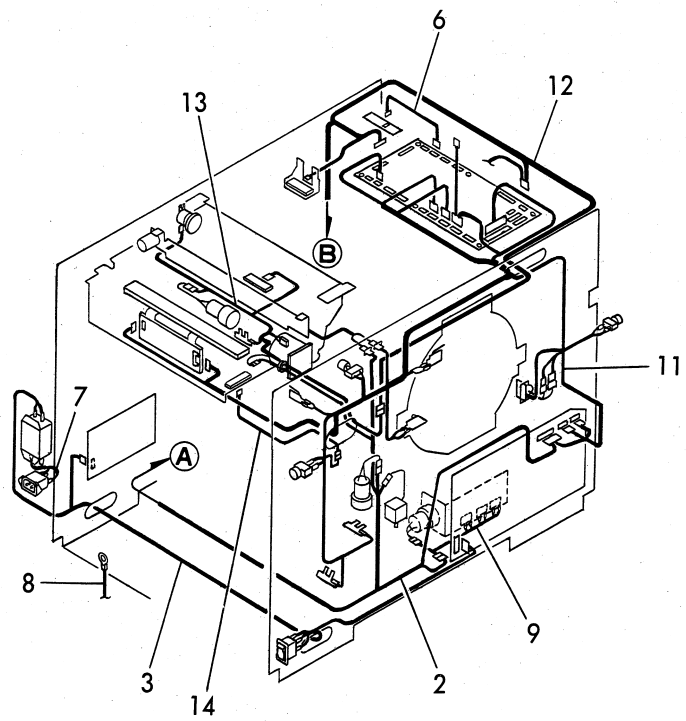

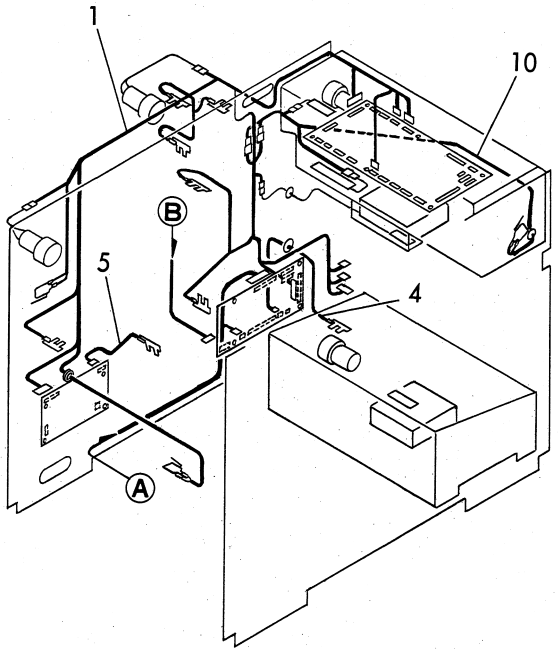

KEY No.	PARTS No.	DESCRIPTION	Q'TY	REMARKS
1	J3-W1021	Printer cable 2 unit	1	
2	J3-W1031	Printer cable 3 unit	1	
3	J3-W1041	Primary side cable	1	
4	J3-W1120	Encoder cord unit	1	
5	J3-W1120	Encoder cord unit	1	
6	J3-W1130	Cord unit	1	
7	J3-W1150	Filter cord unit	1	
8	J3-W2050	Ground Line	1	D
9	L1-W1030	Press motor relay cord unit	1	
10	L1-W1060	Box cord unit	1	
11	L1-W1080	Printer cable 1 unit	1	
12	L1-W1150	Printer cable 4 unit	1	
13	L1-W1160	Master feed cord 2 unit	1	
14	L1-W1180	End-mark relay cord	1	

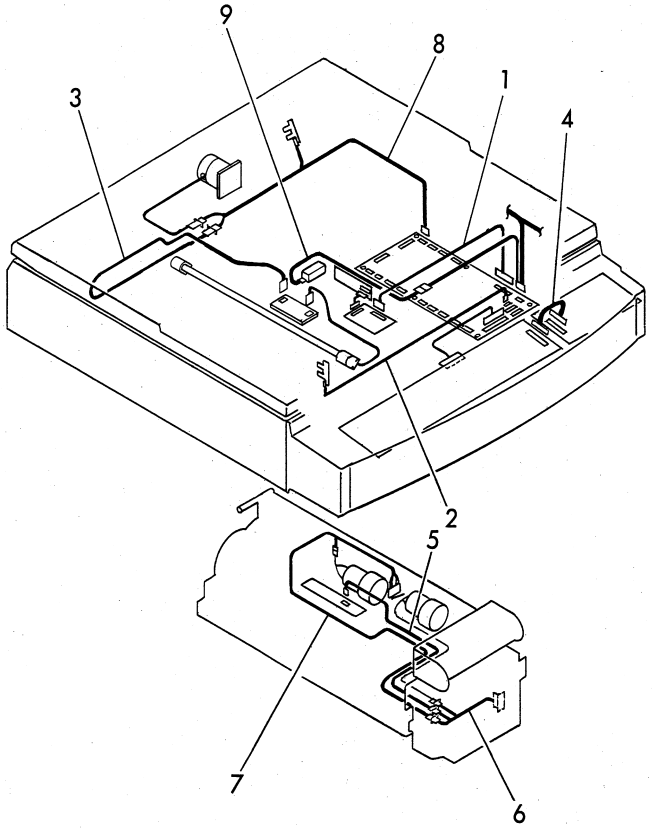

KEY No.	PARTS No.	DESCRIPTION	Q'TY	REMARKS
1	J3-W1060	A/D cord unit	1	
2	J3-W1070	Position sensor cord unit	1	
3	J3-W1080	Lamp cord unit	1	
4	L1-W1041	Panel cord unit	1	
5	L1-W1100	Detecting cord unit	1	
6	L1-W1120	Drum relay cord 1	1	
7	L1-W1130	Drum relay cord 2	1	
8	L1-W1140	Scanner relay cord unit	1	
9	L1-W1170	Document sensor relay cord	1	

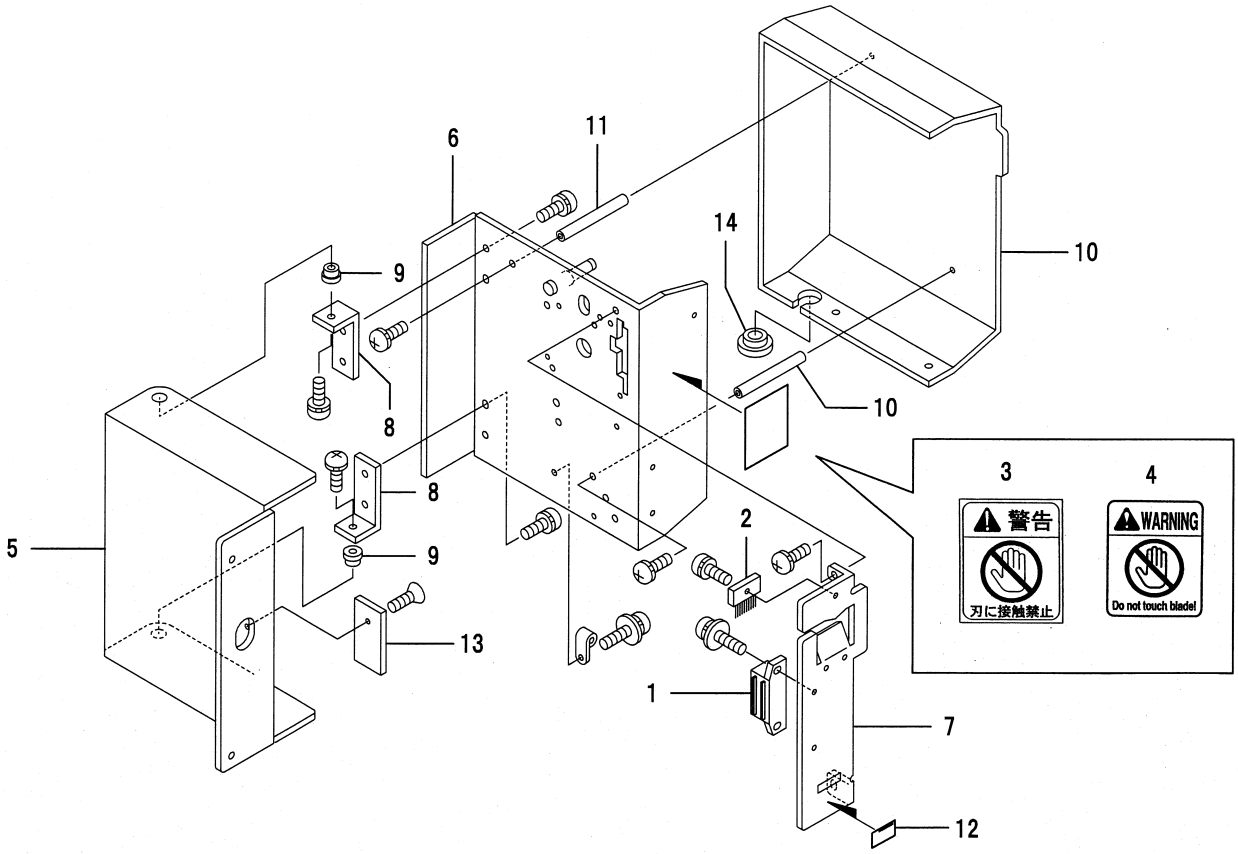

KEY No.	PARTS No.	DESCRIPTION	Q'TY	REMARKS
1	DA129	Magnet catch	1	
2	E6-10520	Brush	2	
3	F2-Y4040	Label,WARNING	1	D
4	J4-Y4050	Label,WARNING	1	EA,EI
5	L1-N5010	Frame A	1	
6	L1-N5020	Frame B unit	1	
7	L1-N5040	Angle	1	
8	L1-N5060	Stay	2	
9	L1-N5070	Shaft	2	
10	L1-N5080	Cover	1	
11	L1-N5090	Pillar	2	
12	L1-N5220	Label	1	
13	L5-G1010	Receiver	1	
14	XA001	Bushing	1	

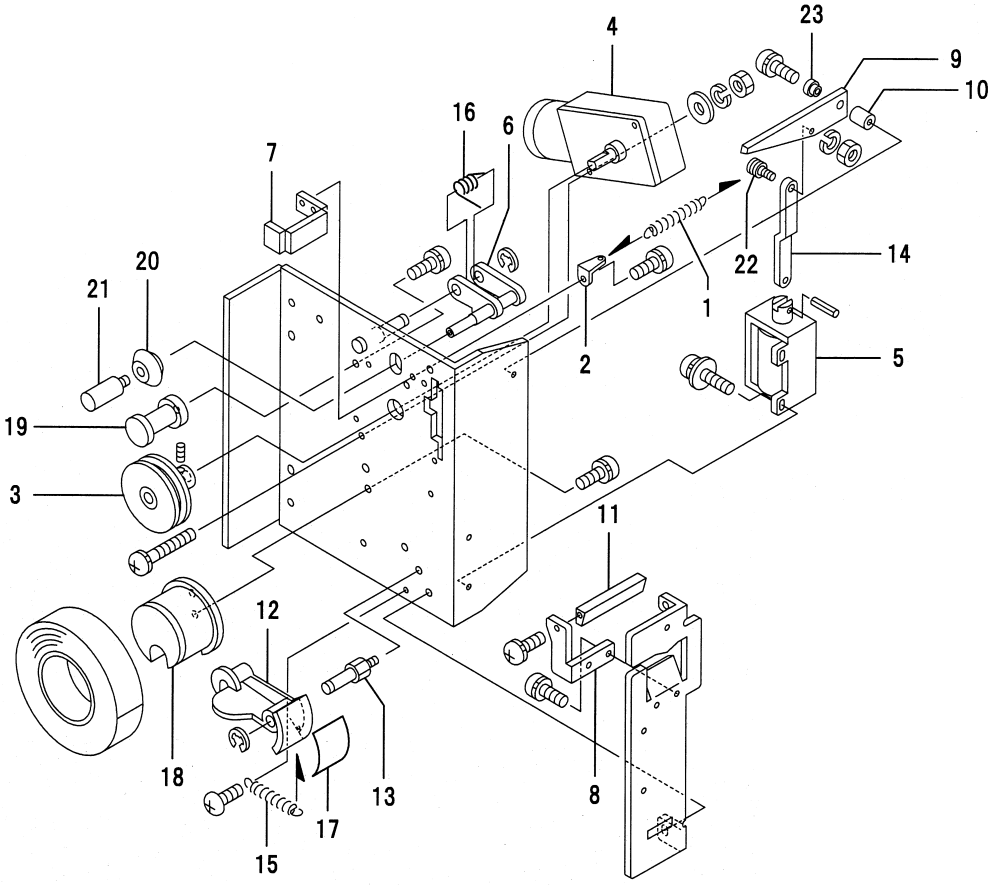

KEY No.	PARTS No.	DESCRIPTION	Q'TY	REMARKS
1	E1-56360	Spring T	1	
2	E1-56480	Angle	1	
3	F7-46140	Roller unit	1	
4	F7-81040	Motor	1	
5	F7-81150	Solenoid	1	
6	L1-N5100	Arm unit•@	1	
7	L1-N5120	Guide angle	1	
8	L1-N5130	Angle	1	
9	L1-N5140	Upper blade	1	
10	L1-N5150	Pillar	1	
11	L1-N5160	Lower blade	1	
12	L1-N5170	Indicator	1	
13	L1-N5180	Pillar	1	
14	L1-N5190	Connect plate	1	
15	L1-N5200	Spring T	1	
16	L1-N5210	Spring To	1	
17	L1-N5230	Label,Indicator	1	
18	72-56150	Tape shaft	1	
19	72-56200	Shaft	1	
20	72-56210	V collar	1	
21	72-56220	Lever	1	
22	72-56320	Support shaft	1	
23	72-56331	Support shaft	1	

I N D E X

PARTS CATALOG INDEX

PARTS No.	SECTION	PAGE	KEY No.	REMARKS
016-0053	7	12	11	
019-0599	33	44	13	D
	50	70	16	D
	53	73	25	D
26-22651	29	38	13	
	30	39	20	
	49	69	12	
26-23100	36	50	5	
26-23111	36	50	6	
26-23250	35	48	8	
26-23350	34	46	12	
26-56180	29	38	14	
26-57300	35	48	13	
3E-51270	42-1	62	①-6	
52-14380	14	21	22	
	36	50	7	
52-23340	35	48	9	
52-61290	32	42	14	
	34	46	6	
53-28240	40	57	21	
72-21640	33	44	11	
72-21670	33	44	12	
72-23233	33-1	45	①-7	
72-23265	33-1	45	①-8	
72-23300	33-1	45	①-9	
72-23340	33-1	45	①-10	
72-23380	33-1	45	①-11	
72-23630	34	46	13	
72-23710	34-1	47	⑦-3	
72-23760	34-1	47	⑦-4	
72-23770	34-1	47	⑦-5	
72-25210	26	34	21	
	35	48	14	
72-25221	35	48	15	
72-25251	35	48	16	
72-25301	35	48	17	
72-25310	6	10	18	
	21	29	5	
	22	30	23	
	23	31	14	
	35	48	18	
72-25810	36	50	19	
72-41240	39	55	10	
	39-1	56	①-6	
72-42100	39	55	22	
72-42400	29	38	15	
72-42411	29	38	16	
72-45361	26	34	22	
72-46260	26	34	23	
72-56150	63	83	18	
72-56200	63	83	19	
72-56210	63	83	20	
72-56220	63	83	21	
72-56320	63	83	22	
72-56331	63	83	23	
72-88750	45	65	19	
	57	77	18	
72-89260	33-1	45	①-12	
72-89620	56	76	9	
72-89800	50	70	1	

PARTS No.	SECTION	PAGE	KEY No.	REMARKS
80-24230	22	30	24	
90-53200	35	48		
A12-51051	33	44	3	
	33-1	45	①-1	
AA003	39	55	2	
	39-1	56	①-1	
AA005	44	64	1	
AA006	35	48	3	
AA008	13	20	1	
	14	21		
	40	57	2	
	44	64		
AA013	39	55	3	
AA014	22	30	1	
	26	34	2	
AA015	4	6	7	
AA016	33	44	6	
AA020	32	42	2	
AA024	4	6	5	
AA049	7-1	13	①-1	
AA072	22	30	2	
AC003	26	34	24	
AC046	22	30	3	
AJ003	37	51	6	
AJ013	39	55	11	
AJ017	14	21	2	
AJ019	24	32	1	
AJ031	26	34	3	
AJ084	44	64		
AJ086	24	32	2	
AJ136	22	30	4	
C6-53650	13	20	2	
	14	21	3	
	35	48	4	
	44	64	5	
C6-89200	50	70	3	D
C9-11150	1-1	2	①-1	
C9-11280	1	1	6	
C9-11470	5	8	2	
C9-11780	5	8	3	
C9-12381	1	1	11	
C9-12391	1	1	12	
C9-12400	1	1	13	
C9-12410	1	1	14	
	38	53	3	
C9-12442	2	4	1	
C9-12630	2	4	2	
C9-12640	2	4	3	
C9-12670	2	4	4	
C9-12681	2	4	5	
C9-12780	3	5	1	
C9-12811	3	5	2	
C9-12820	3	5	3	
C9-12830	3	5	4	
C9-12860	3	5	5	
C9-13421	4	6	8	
C9-13430	4	6	9	
C9-13440	4	6	14	
C9-14360	38	53	4	
C9-22530	33	44	7	

PARTS No.	SECTION	PAGE	KEY No.	REMARKS	PARTS No.	SECTION	PAGE	KEY No.	REMARKS
C9-23200	34	46	2		E1-35181	26	34	5	
C9-25230	36	50	1		E1-35250	26	34	6	
C9-25570	35	48	19		E1-35300	26	34	7	
C9-26280	40	57	3		E1-35370	26	34	8	
C9-26291	40	57	4		E1-35461	26	34	9	
C9-26371	40	57	5		E1-35540	27	36	1	
C9-26511	40	57	22		E1-35550	27	36	2	
C9-45860	26	34	4		E1-35641	28	37		
C9-59300	22	30	25		E1-35661	29	38	1	
	27	36	10	D,EA,EI	E1-35680	29	38	2	
	29	38	17	D,EA,EI	E1-35701	29	38	3	
	53	73	3	D,EA,EI	E1-35781	29	38	6	
	54	74		D,EA,EI	E1-41231	39	55	4	
	55	75		D,EA,EI	E1-45272	22	30	5	
CA003	10	16	6		E1-45282	21	29	1	
	12	19	1		E1-46320	24	32	4	
	23	31	15		E1-46340	24	32	5	
	32	42	3		E1-50190	49	69	2	
	36	50	8		E1-50380	51	71		
	37	51	3		E1-50560	39	55	14	
	38	53	20		E1-51141	50	70	2	
	39	55	12		E1-52050	49	69	1	D
	40	57	13			53	73	4	D
	44	64	4		E1-52560	38	53	25	D
	57	77	6			53	73	5	D
	57	77	9		E1-52571	53	73	6	D
	57	77	8		E1-52580	3	5	11	D
	57	77	7			51	71	3	D
	57	77	1			53	73	7	D
	57	77	5		E1-53210	42	61	12	
	57	77	4		E1-56360	63	83	1	
	57	77	3		E1-56480	63	83	2	
	57	77	2		E1-64100	26	34	25	
	57	77	10		E1-70850	28	37	3	
CA018	17	24	1		E1-75340	30	39	2	
	57	77	11		E1-75351	30	39	3	
DA059	51	71	1		E1-79040	49	69	1	EA,EI
DA060	18	25				54	74	4	EA,EI
DA111	47	67	19			55	75		EA,EI
DA129	62	82	1		E1-79050	33	44	13	EA,EI
DA147	24	32	3			50	70	16	EA,EI
DZ004	3	5	10			54	74	25	EA,EI
E1-12722	3	5	6			55	75	24	EA,EI
E1-12740	3	5	7		E1-79230	38	53	25	EA,EI
E1-12790	3	5	8			54	74	5	EA,EI
E1-15420	1	1	15			55	75		EA,EI
E1-16280	37	51	7		E1-79241	54	74	6	EA,EI
E1-16321	37	51	4			55	75		EA,EI
E1-21300	31	41	1		E1-79250	3	5	11	EA,EI
E1-21322	31	41	2			51	71	3	EA,EI
E1-21330	31	41	3			54	74	7	EA,EI
E1-21450	33	44	8			55	75		EA,EI
E1-21580	32	42	4		E1-81080	50	70	3	120V
E1-21621	32	42	5		E1-81270	50	70		230V
	37	51	8		E1-82080	32	42	7	
E1-21631	32	42	6			37	51	9	
E1-21731	33	44	9			58	78	6	
E1-23660	34	46	8			58	78	7	
E1-27170	36	50	9		E1-88501	27	36	3	
E1-27180	36	50	10			57	77	15	

PARTS CATALOG INDEX

PARTS No.	SECTION	PAGE	KEY No.	REMARKS	PARTS No.	SECTION	PAGE	KEY No.	REMARKS
E1-A0060	38	53	②		J2-B1131	12	19	3	
	38-1	54	②		J2-B1181	12	19	4	
	38-1	54	①-②		J2-B2013	18	25	2	
E6-10520	62	82	2		J2-B2020	18	25	3	
EA004	7-1	13	①-3		J2-B2031	18	25	4	
EA007	2	4	26		J2-B2073	18	25	6	
EA008	42-1	62	①-1		J2-B2081	18	25	7	
EB001	7-1	13	①-2		J2-B2091	18	25	8	
F2-Y4040	62	82	3	D	J2-B2120	18	25	10	
F4-60300	48	68	26	D	J2-B2141	18	25	12	
	50	70	4		J2-B2161	18	25	13	
	53	73	8	D	J2-B2180	18	25	14	
	54	74		120V,230V	J2-B2200	18	25	15	
	55	75		120V,230V	J2-B2210	18	25	16	
F7-10700	4	6	10		J2-B2260	18	25	5	
F7-11081	38	53	5		J2-B2280	18	25	11	
F7-11100	38	53	6		J2-B2290	18	25	17	
F7-11310	38	53	7		J2-B2310	18	25	9	
F7-11550	38	53	9		J2-C1100	14	21	5	
F7-20840	15	22	1		J2-C2050	10	16	7	
	16	23			J2-C2060	10	16	8	
F7-21210	14	21	4		J2-C2071	10	16	9	
F7-21640	23	31	1		J2-C2210	10	16	10	
F7-21650	40	57	14		J2-C2230	10	16	11	
F7-21710	48	68	1		J2-E1170	16	23	2	
F7-21810	20	27			J2-F1030	17	24		
F7-30050	26	34	10		J2-F1051	17	24	3	
F7-45230	33-1	45	①-2		J2-F1070	17	24	4	
F7-46140	63	83	3		J2-F1111	17	24	5	
F7-46330	42	61	17			48	68	2	
F7-46370	42	61	21		J2-F1150	17	24	6	
F7-46380	42	61	22		J2-G1010	11	17	7	
F7-46620	44	64	6		J2-G1020	11	17	8	
F7-46801	26	34	11		J2-G1060	11	17	9	
F7-47800	39	55	15		J2-G1080	11	17	10	
F7-81040	63	83	4		J2-G4010	8	14	6	
F7-81060	26	34	12		J2-G4020	8	14	7	
	58	78	9		J2-G4030	8	14	1	
F7-81150	63	83	5		J2-H1011	12	19	5	
F7-81460	39	55	13		J2-H1080	12	19	6	
	58	78	8		J2-H1091	12	19	7	
F7-88800	7	12	3		J2-H1100	12	19	8	
	59	79	1		J2-H1120	12	19	9	
J2-A1101	11	17	3		J2-H1130	12	19	10	
J2-A1111	11	17	4		J2-H1140	12	19	11	
J2-A1130	11	17	5		J2-H1150	10	16	12	
J2-A1150	11	17	6		J2-H1160	12	19		
J2-A2021	11-1	18	②-1		J2-J1010	13	20	3	
	11-1	18	②-1		J2-J1020	13	20	4	
J2-A2080	11	17	1			14	21	6	
J2-A2160	11	17	②	D,EA	J2-J1030	13	20	5	
	11-1	18	②	D,EA		14	21	7	
J2-A2170	11-1	18	②-2		J2-J1040	13	20	6	
	11-1	18	②-2			14	21	8	
J2-A2180	11	17	②	EI	J2-J1060	13	20	7	
	11-1	18	②	EI		14	21	9	
J2-A3060	10	16	1		J2-J1070	13	20	8	
J2-A3080	10	16	2			14	21	10	
J2-A3150	10	16	3		J2-J1080	13	20	9	
J2-B1122	12	19	2		J2-J1090	14	21	11	

PARTS CATALOG INDEX

PARTS No.	SECTION	PAGE	KEY No.	REMARKS	PARTS No.	SECTION	PAGE	KEY No.	REMARKS
J2-J1091	13	20	10		J3-A1130	1-1	2	③-6	
J2-J1100	13	20	11		J3-A1182	1	1	9	
	14	21	12		J3-A1191	1	1	10	
J2-J1110	13	20			J3-A1200	1	1	5	
J2-J1120	13	20	13		J3-A1222	1-1	2	①-4	
J2-J1130	13	20	14		J3-A2410	4-1	7	③-1	
	14	21	13		J3-A2420	4-1	7	④-1	
J2-J1140	13	20	15		J3-A2430	4-1	7	③-2	
J2-J2010	14	21	14		J3-A2460	4-1	7	④-2	
J2-J2020	14	21	15		J3-A2480	4-1	7	③-3	
J2-J2031	14	21	16			4-1	7	④-3	
J2-J2040	14	21	17		J3-A2490	4-1	7	③-4	
J2-J2050	14	21	18			4-1	7	④-4	
J2-J2060	14	21	19		J3-A2500	4-1	7	④-5	
J2-J2080	14	21	20			4-1	7	③-5	
J2-L1010	15	22	2		J3-A2520	4-1	7	③-6	
J2-L1050	15	22	3			4-1	7	④-6	
J2-L1060	15	22	4		J3-A3080	7	12	4	
J2-L1070	15	22	5		J3-A3091	7	12	5	
J2-L1080	15	22	6		J3-A3140	7	12	8	
J2-L1090	15	22	7		J3-A4010	5	8	①	
J2-L1100	15	22	8			5-1	9	①	
	16	23	3		J3-A5010	6	10	①	
	25	33	1			6-1	11	①	
J2-L1110	15	22	9		J3-A6050	2	4	6	
J2-L1120	15	22	10		J3-A7010	1	1	16	
J2-L1130	15	22	11		J3-A7040	1	1	17	
J2-L1141	15	22	12		J3-A7081	1-2	3	④-5	
J2-L1151	15	22	13		J3-A7091	1	1	18	
J2-L1161	15	22	14		J3-A8012	38	53	10	
J2-L1170	15	22	15		J3-A8052	38	53	11	
J2-M1010	16	23	4		J3-A8090	38	53	13	
J2-M1050	16	23	5		J3-A8110	38	53	15	
J2-M1060	16	23	6		J3-B1011	30	39	①	
J2-M1070	16	23	7			30-1	40	①	
J2-M1080	16	23	8		J3-B1080	30	39	5	
J2-M1110	16	23	9		J3-B1091	30	39	6	
J2-M1130	16	23	10		J3-B1100	30	39	7	
J2-M1140	16	23	11		J3-B1140	30	39	8	
J2-M1150	16	23	12		J3-B1150	30	39	9	
J2-N1010	17	24	7		J3-B1160	30	39	10	
J2-N1020	17	24	8		J3-B1191	30	39	11	
J2-N1030	17	24	9		J3-B1200	30	39	12	
J2-N1040	17	24	10		J3-B1210	30	39	13	
J2-N1050	17	24	11		J3-B1220	30	39	14	
J2-N1060	17	24	12		J3-B1230	30	39	15	
J2-N1070	17	24	13		J3-B1240	30	39	16	
J2-N1080	17	24	14		J3-B1251	30	39	17	
J2-X1010	14	21	21		J3-B1261	30	39	18	
	58	78	11		J3-B2011	31	41	4	
J2-X1040	15	22	16		J3-B2020	31	41	5	
	58	78	15		J3-B2030	25	33	2	
J2-X1050	15	22	17			31	41	6	
	59	79	2		J3-B2040	31	41	7	
J3-A1020	1-1	2	①-2		J3-B2060	31	41	8	
J3-A1032	1-1	2	①-3		J3-B2071	32	42	①	
J3-A1051	1	1	7			32-1	43	①	
J3-A1061	1	1	8		J3-B2100	31	41	9	
J3-A1080	1-1	2	③-1		J3-B2110	31	41	10	
J3-A1120	1-1	2	③-5		J3-B2120	32	42	8	

PARTS No.	SECTION	PAGE	KEY No.	REMARKS	PARTS No.	SECTION	PAGE	KEY No.	REMARKS
J3-B2130	32	42	9		J3-F2020	39	55	17	
J3-B2140	32	42	10		J3-F2060	39	55	19	
J3-B2150	32	42	11			44	64	7	
J3-B2160	32	42	12		J3-F2120	39	55	⑳	
J3-B3030	34	46	3			39-1	56	⑳	
J3-B3040	34	46	4		J3-F3011	38	53	①	
J3-B3050	34	46	5			38-1	54	①	
J3-B4011	33	44	2		J3-F3040	38	53	21	
J3-B4030	33-1	45	①-3		J3-F3080	38	53	22	
J3-B4051	33	44	4		J3-G1210	20	27	2	
J3-B4071	33	44	5		J3-G2061	22	30	6	
J3-B4080	33-1	45	①-4		J3-G4020	24	32		
J3-B4090	33-1	45	①-5		J3-H1070	44	64	8	
J3-B5041	34	46	9		J3-H1091	45	65	1	
J3-B5050	34	46	10		J3-H1101	45	65	2	
J3-B6010	33	44			J3-H1140	45	65	3	
J3-C1010	35	48	5		J3-H1150	45	65	4	
J3-C1020	35	48	6		J3-H1170	44	64	9	
J3-C2010	35	48	11		J3-H1200	44	64	10	
J3-C2022	35	48	①		J3-H2110	45	65	20	
	35-1	49	①		J3-J1080	47	67	1	
J3-C2070	35	48	12		J3-J1110	47	67	2	
J3-C3010	36	50	2		J3-J1260	47	67	3	
J3-C3020	36	50	3		J3-K1050	48	68		
J3-C3040	36	50	4		J3-K1071	48	68	4	
J3-C4013	36	50	11		J3-K1090	48	68	5	
J3-C4020	36	50	12		J3-K1120	48	68	6	
J3-C4042	36	50	13		J3-K1150	48	68	7	
J3-C4090	36	50	14		J3-K1160	18	25	18	
J3-D1010	40	57	6			48	68	8	
J3-D1130	40	57	11		J3-K1510	48	68	18	
J3-D1140	40	57	12		J3-K1520	48	68	19	
J3-D2010	40	57	15		J3-K2011	49	69	4	
J3-D2030	40	57	16		J3-K2020	50	70	5	
J3-D2040	40	57	17		J3-K2030	49	69		
J3-D3011	40	57	23			50	70	6	
J3-D3030	40	57	24		J3-K2041	50	70	7	
J3-D3050	40	57	25		J3-K2060	49	69	6	
J3-E1010	26	34	13		J3-K2070	50	70	8	
J3-E1020	26	34	14		J3-K3030	51	71	4	
J3-E1040	26	34	15		J3-K3070	51	71	5	
J3-E1060	26	34	16		J3-K3080	51	71	6	
J3-E1071	26	34	17		J3-K3090	51	71	7	
J3-E1080	26	34	18		J3-K3140	51	71	8	
J3-E1090	26	34	19		J3-K3150	51	71	9	
J3-E1100	26	34	20		J3-K3160	51	71	10	
J3-E2010	27	36	4		J3-K3180	51	71	11	
J3-E2020	27	36	5		J3-K3190	51	71	12	
J3-E2030	27	36	6		J3-K4030	52	72	1	
J3-E2040	27	36	7		J3-K5070	8	14	3	
J3-E3010	29	38	8		J3-L1010	37	51	16	
J3-E4021	28	37	4		J3-L1050	37	51	11	
J3-E4040	27	36	12		J3-L1061	37	51	12	
J3-E5010	29	38	11		J3-L1071	37	51	13	
J3-F1061	39	55	5		J3-M1030	42	61	20	
J3-F1072	39	55	6		J3-M1040	42	61	18	
J3-F1080	39	55	7		J3-M1050	42	61	19	
J3-F1091	39	55	8		J3-M2020	42-1	62	①-2	
J3-F1100	39	55	9		J3-M2030	42-1	62	①-3	
J3-F2010	39	55	16		J3-M2070	42-1	62	①-4	

PARTS CATALOG INDEX

PARTS No.	SECTION	PAGE	KEY No.	REMARKS
J3-M2080	42-1	62	①-5	
J3-S0002	1	1	①	
	1-1	2	①	
J3-S0003	1	1	②	
	1-1	2	②	
J3-S0004	1	1	③	
	1-1	2	③	
J3-S0007	34	46	⑦	
	34-1	47	⑦	
J3-S0008	35	48	②	
	35-1	49	②	
J3-S0009	26	34	①	
	26-1	35	①	
J3-S0012	39	55	①	
	39-1	56	①	
J3-S0014	42	61	①	
	42-1	62	①	
J3-S0015	34	46	①	
	34-1	47	①	
J3-S0062	4	6	③	
	4-1	7	③	
J3-S0063	4	6	④	
	4-1	7	④	
J3-T1010	31	41	11	D,EA,EI
	53	73	26	D,EA,EI
	54	74		D,EA,EI
	55	75	25	D,EA,EI
J3-T1030	27	36	11	D
	53	73	9	D
J3-T1090	53	73	10	D,EA,EI
	54	74		D,EA,EI
	55	75		D,EA,EI
J3-T1100	11	17	11	D,EA,EI
	53	73		D,EA,EI
	54	74		D,EA,EI
	55	75		D,EA,EI
J3-T1110	51	71	13	D
	53	73	12	D
J3-T1160	53	73	13	
	54	74		
	55	75		
J3-T3010	27	36	11	EA,EI
	54	74	9	EA,EI
	55	75		EA,EI
J3-T3060	51	71	13	EA,EI
	54	74	12	EA,EI
	55	75		EA,EI
J3-V3030	17	24	15	
	59	79	4	
J3-V3361	17	24	16	
	59	79	3	
J3-V3380	23	31	16	
	59	79	5	
J3-V3440	48	68	9	
	57	77	14	
J3-W1021	60	80	1	
J3-W1031	60	80	2	
J3-W1041	60	80	3	
J3-W1060	17	24	17	
	61	81	1	

PARTS No.	SECTION	PAGE	KEY No.	REMARKS
J3-W1070	12	19	13	
	61	81	2	
J3-W1080	15	22	18	
	61	81	3	
J3-W1120	39	55	21	
	44	64	16	
	60	80	4	
	60	80	5	
J3-W1130	60	80	6	
J3-W1150	50	70	10	
	60	80	7	
J3-W2050	50	70	11	D
	60	80	8	D
J3-X1010	49	69	7	100V,120V
	59	79	6	D,120V
J3-X1020	49	69	7	230V
	59	79	6	230V
J3-X1040	24	32	7	
	56	76		
J3-X1050	24	32	8	
	58	78	12	
J3-X1210	23	31	17	
	58	78	16	
J4-Y4050	62	82	4	EA,EI
J8-A1250	1	1	19	
J8-A6260	2	4	20	
J8-A6270	2	4	23	
J8-E3040	29	38	4	
J8-E3070	29	38	5	
J8-E3090	29	38	7	
J8-F2010	39	55	18	
J8-H1050	42	61	2	
J8-V3190	28	37	5	
	57	77	16	
J8-V3230	20	27	3	
	25	33		
	57	77	12	
	57	77	13	
J8-X1110	23	31	18	
	36	50	15	
	58	78	4	
	58	78	5	
J8-X1130	6	10	2	
	58	78	1	
L1-A2010	4	6	①	
	4-1	7	①	
L1-A2030	4	6	②	
	4-1	7	②	
L1-A2050	4	6	6	
L1-A3010	7	12	①	
	7-1	13	①	
L1-A3020	7-1	13	①-4	
L1-A3030	7-1	13	①-5	
L1-A3040	7-1	13	①-6	
L1-A3050	7-1	13	①-7	
L1-A3070	7-1	13	①-9	
L1-A3080	7-1	13	①-10	
L1-A3091	7-1	13	①-11	
L1-A3110	7-1	13	①-13	
L1-A3120	7-1	13	①-14	

PARTS CATALOG INDEX

PARTS No.	SECTION	PAGE	KEY No.	REMARKS	PARTS No.	SECTION	PAGE	KEY No.	REMARKS
L1-A3130	7-1	13	①-15			37	51	5	
L1-A3140	7-1	13	①-16		L1-C4020	36	50	17	
L1-A3160	7	12	7		L1-C4030	36	50	18	
L1-A3181	7	12	9		L1-C5010	35	48	21	
L1-A4010	5	8	4		L1-C5020	35	48	22	
L1-A4020	5	8	5		L1-D1011	40	57	①	
L1-A4030	5	8	6			40-1	58	①	
L1-A4040	5	8	7		L1-D1020	40	57	7	
L1-A4050	5	8	8		L1-D1050	40	57	9	
L1-A4060	5	8	9		L1-D1070	40	57	8	
L1-A4070	5	8	10		L1-D1080	40	57	10	
L1-A4080	5	8	11		L1-D2011	40	57	18	
L1-A4090	5	8	12		L1-D2020	40	57	20	
L1-A4120	4	6	11		L1-D4012	41	59	1	
L1-A4130	4	6	12		L1-D4051	41	59	3	
L1-A4140	4	6	13		L1-D4060	41	59	4	
L1-A5010	6	10	3		L1-D4080	41	59	5	
L1-A5020	6	10	4		L1-D4090	41	59	6	
L1-A5030	6	10	5		L1-D4100	41	59	7	
L1-A5040	6	10	6		L1-D4111	41	59	8	
L1-A5050	6	10	7		L1-D4130	41	59	9	
L1-A5060	6	10	8		L1-D4140	41	59	10	
L1-A5070	6	10	9		L1-D4150	41	59	②	
L1-A5080	6	10	10			41-1	60	②	
L1-A5090	6	10	11		L1-E4010	28	37	6	
L1-A5100	6	10	12		L1-E4020	28	37	7	
L1-A5110	6	10	13		L1-E4030	28	37	8	
L1-A5120	6	10	14		L1-E4040	28	37	9	
L1-A5130	6	10	15		L1-E4050	28	37	10	
L1-A5140	6	10	16		L1-F1010	39-1	56	①-2	
L1-A6011	2	4	7		L1-F3010	38	53	23	
L1-A6061	2	4	8		L1-F3020	38	53	24	
L1-A6070	2	4	9		L1-G1061	20	27	4	
L1-A6080	2	4	10		L1-G4041	22	30	7	
L1-A6091	2	4	11			24	32	9	
L1-A6100	2	4	12		L1-H1010	45	65	5	
L1-A6111	2	4	13		L1-H1020	45	65	6	
L1-A6210	2	4	15		L1-H1030	44	64	11	
L1-A6220	2	4	16		L1-H1040	44	64	12	
L1-A6230	2	4	17		L1-H1060	45	65	7	
L1-A6260	2	4	18		L1-H1070	45	65	8	
L1-A6270	2	4	19		L1-H1080	45	65	9	
L1-A6290	2	4	21		L1-H1090	45	65	10	
L1-A6300	2	4	22		L1-H1100	45	65	11	
L1-A6320	2	4	24		L1-H1110	45	65	12	
L1-A6330	2	4	25		L1-H1130	44	64	13	
L1-A7010	1	1	④		L1-H1140	45	65		
	1-2	3	④		L1-H1170	44	64	14	
L1-A8010	38	53	12		L1-H1190	45	65		
L1-A8020	38	53	14		L1-H1200	45	65	15	
L1-A8030	38	53	18		L1-H2070	45	65	21	
L1-A8040	38	53	17		L1-H2090	45	65	22	
L1-A8050	38	53	19		L1-J1010	47	67	4	
L1-A8060	38	53	8		L1-J1020	47	67	5	
L1-B1010	30	39	4		L1-J1030	47	67	6	
L1-B4010	33-1	45	①-6		L1-J1040	47	67	7	
	35	48	10		L1-J1050	47	67	8	
L1-C3010	35	48	20		L1-J1061	46	66	1	
L1-C4010	32	42	13		L1-J1071	46	66	2	
	36	50	16		L1-J1081	46	66	3	

PARTS No.	SECTION	PAGE	KEY No.	REMARKS	PARTS No.	SECTION	PAGE	KEY No.	REMARKS
L1-J1110	47	67	9		L1-L1011	37	51	14	
L1-J1120	47	67	10		L1-L1020	37	51	15	
L1-J1130	47	67	11		L1-L1030	37	51	①	
L1-J1140	47	67	12			37-1	52	①	
L1-J1150	47	67	13		L1-L1051	37	51	⑩	
L1-J1162	46	66	6			37-1	52	⑩	
L1-J1190	47	67	18		L1-L1080	37	51	2	
L1-J1220	46	66	7		L1-M1010	42	61	3	
L1-J1230	46	66	8		L1-M1020	42	61	4	
L1-J1240	46	66	4		L1-M1030	42	61	5	
L1-J1260	46	66	5		L1-M1040	42	61	6	
L1-J1270	46	66	9		L1-M1050	42	61	7	
L1-K1010	48	68	10		L1-M1090	42	61	8	
L1-K1020	48	68	11		L1-M1100	42	61	9	
L1-K1030	48	68	12		L1-M1110	42	61	10	
L1-K1041	48	68	13		L1-M1120	42	61	11	
L1-K1050	48	68	14		L1-M1151	38	53	26	
L1-K1060	48	68	15		L1-M3010	43	63	2	
L1-K1070	48	68	16		L1-M3030	43	63	3	
L1-K1080	48	68	17		L1-M3050	43	63	4	
L1-K1530	48	68	20		L1-M3060	43	63	5	
L1-K1560	49	69	3		L1-M3070	43	63	6	
L1-K1570	18	25	19		L1-M3081	43	63	7	
L1-K2010	49	69	10		L1-M3090	43	63	8	
L1-K2020	50	70	12		L1-N5010	62	82	5	
L1-K2030	49	69	11		L1-N5020	62	82	6	
L1-K3010	51	71	15		L1-N5040	62	82	7	
L1-K4010	52	72	3		L1-N5060	62	82	8	
L1-K4020	52	72	2		L1-N5070	62	82	9	
L1-K5010	8	14	4	D	L1-N5080	62	82	10	
L1-K5050	8	14	5		L1-N5090	62	82	11	
L1-K5061	8	14	2		L1-N5100	63	83	6	
L1-K5100	9	15	1		L1-N5120	63	83	7	
L1-K5110	9	15	2		L1-N5130	63	83	8	
L1-K5120	9	15	3		L1-N5140	63	83	9	
L1-K5130	9	15	4		L1-N5150	63	83	10	
L1-K5140	9	15	5		L1-N5160	63	83	11	
L1-K5150	9	15	6		L1-N5170	63	83	12	
L1-K5160	9	15	7		L1-N5180	63	83	13	
L1-K5170	9	15	8		L1-N5190	63	83	14	
L1-K5180	9	15	9		L1-N5200	63	83	15	
L1-K5190	9	15	10		L1-N5210	63	83	16	
L1-K5200	9	15	11		L1-N5220	62	82	12	
L1-K5210	9	15	12		L1-N5230	63	83	17	
L1-K5220	9	15	13		L1-P1010	19	26	1	
L1-K5230	9	15	14		L1-P1020	19	26	2	
L1-K5240	9	15	15		L1-P1030	19	26	3	
L1-K5250	9	15	16		L1-P1040	20	27	5	
L1-K5260	9	15	17		L1-P1051	19	26	4	
L1-K5270	9	15	18		L1-P1060	19	26	5	
L1-K5280	9	15	19		L1-P1070	19	26	6	
L1-K5290	9	15	20		L1-P1080	19	26	7	
L1-K5300	9	15	21		L1-P1090	20	27	6	
L1-K5310	9	15	22		L1-P1101	20	27	⑦	
L1-K5320	9	15	23			20-1	28	⑦	
L1-K5330	9	15	24		L1-P1110	20-1	28	⑦-1	
L1-K5340	8	14	8		L1-P1130	20	27	8	
L1-K5380	8	14	4	EA,EI	L1-P1140	20	27	9	
L1-K6010	10	16			L1-P1190	20	27	10	
L1-K6020	10	16	5		L1-P1210	20	27	11	

PARTS No.	SECTION	PAGE	KEY No.	REMARKS	PARTS No.	SECTION	PAGE	KEY No.	REMARKS
L1-P1230	20	27	12		L1-T1040	11-1	18	②-3	D,EA
L1-P1240	20	27	13			53	73	14	D,EA
L1-P1251	20-1	28	⑦-2			54	74		D,EA
L1-P1290	19	26	8		L1-T1050	11	17	12	D,EA
L1-P1300	20	27	14			53	73	15	D,EA
L1-P1320	19	26	9			54	74		D,EA
L1-P1330	20	27	15		L1-T1060	30	39	21	D,EA
L1-P1350	19	26	10			53	73	16	D,EA
L1-P2010	21	29	2			54	74		EI
L1-P2040	21	29	3		L1-T1070	51	71	18	D
L1-P2050	21	29	4			53	73	17	D
L1-P3010	22	30	8		L1-T1091	47	67	14	D,EA
L1-P3020	22	30	9			53	73	18	D,EA
L1-P3040	22	30	10			54	74		D,EA
L1-P3050	22	30	11		L1-T1100	47	67	15	D,EA
L1-P3060	22	30	12			53	73	19	D,EA
L1-P3070	22	30	13			54	74		D,EA
L1-P3080	22	30	14		L1-T1110	47	67	16	D,EA
L1-P3090	22	30	15			53	73	20	D,EA
L1-P3100	22	30	16			54	74		D,EA
L1-P3110	22	30	17		L1-T1120	47	67	17	D,EA
L1-P3120	22	30	18			53	73	21	D,EA
L1-P3130	22	30	19			54	74		D,EA
L1-P3140	22	30	20		L1-T1290	8	14	9	EA,EI
L1-P3151	22	30	21		L1-T1300	8	14	10	EA,EI
L1-P3171	22	30	22		L1-T1330	20	27	17	D
L1-P4011	23	31	2			53	73	1	D
L1-P4040	23	31	3		L1-T1340	20	27	16	
L1-P4051	23	31	4			53	73	22	D,EA,EI
L1-P4060	23	31	5			54	74		D,EA,EI
L1-P4070	23	31	6			55	75	21	D,EA,EI
L1-P4080	23	31	7		L1-T1350	19	26	11	
L1-P4091	23	31	8			53	73	23	D,EA,EI
L1-P4100	23	31	9			54	74		D,EA,EI
L1-P4131	23	31	10			55	75	22	D,EA,EI
L1-P4141	23	31	11		L1-T1360	8	14	11	D,EA,EI
L1-P4170	23	31	12			53	73	27	D,EA,EI
L1-P4201	23	31	13			54	74		D,EA,EI
L1-P5010	24	32	10			55	75	26	D,EA,EI
L1-P5030	24	32	11		L1-T1380	51	71	16	
L1-P5040	24	32	12			53	73	24	D,EA,EI
L1-P5050	24	32	13			54	74		D,EA,EI
L1-P5060	24	32	14			55	75	23	D,EA,EI
L1-P5070	24	32	15		L1-T2130	51	71	17	
L1-P5090	24	32	16		L1-T3040	51	71	18	EA,EI
L1-P5101	24	32	17			54	74	17	EA,EI
L1-P6020	25	33	4			55	75		EA,EI
L1-P6040	25	33	5		L1-T3060	20	27	18	EA,EI
L1-P6150	25	33	6			54	74	1	EA,EI
L1-P6161	25	33	7			55	75		EA,EI
L1-P6201	25	33	8		L1-T4010	11-1	18	②-3	EI
L1-P6211	25	33	9			55	75	14	EI
L1-P6220	25	33	10		L1-T4020	11	17	12	EI
L1-P6231	25	33	11			55	75	15	EI
L1-P6241	25	33	12		L1-T4030	30	39	21	EI
L1-P6251	25	33	13			55	75	16	EI
L1-P6280	25	33	14		L1-T4040	47	67	14	EI
L1-P6292	25	33	15			55	75	18	EI
L1-T1010	8	14	9	D	L1-T4050	47	67	16	EI
L1-T1020	8	14	10	D		55	75	19	EI

PARTS CATALOG INDEX

PARTS No.	SECTION	PAGE	KEY No.	REMARKS	PARTS No.	SECTION	PAGE	KEY No.	REMARKS
L1-T4060	47	67	17	EI		56	76	4	
	55	75	20	EI	LA005	29	38	12	
L1-V3011	9	15	25			30	39	19	
	59	79	7			34	46	11	
L1-V3200	43	63	1			49	69	8	
	57	77	17			56	76	1	
L1-V3380	48	68	24			56	76	2	
	59	79	9			56	76	3	
L1-V3410	50	70	13			56	76	5	
	59	79	8		LC011	49	69	9	
L1-W1030	41	59	11			56	76	8	
	60	80	9		M3-S0001	33	44	①	
L1-W1041	61	81	4			33-1	45	①	
L1-W1060	28	37	1		NPN	1-1	2	②-1	
	60	80	10			1-1	2	③-2	
L1-W1080	60	80	11			1-1	2	②-2	
L1-W1100	7	12	2			1-1	2	③-3	
	61	81	5			1-1	2	②-3	
L1-W1120	2	4	14			4-1	7	①-2	
	61	81	6			4-1	7	②-2	
L1-W1130	6	10	17			4-1	7	②-3	
	61	81	7			4-1	7	②-4	
L1-W1140	12	19	14			4-1	7	①-1	
	61	81	8			4-1	7	②-1	
L1-W1150	60	80	12			5-1	9	①-2	
L1-W1160	20	27	19			5-1	9	①-1	
	60	80	13			6-1	11	①-2	
L1-W1170	17	24	18			6-1	11	①-1	
	61	81	9			7-1	13	①-8	
L1-W1180	20	27	20			7-1	13	①-12	
	60	80	14			26-1	35	①-2	
L1-X1010	45	65	16			26-1	35	①-1	
	58	78	14			30-1	40	①-2	
L1-X1020	43	63	9			30-1	40	①-1	
	58	78	13			32-1	43	①-2	
L1-X1050	44	64	15			32-1	43	①-3	
	58	78	10			32-1	43	①-1	
L1-X1070	7	12	6			34-1	47	①-2	
	58	78	2			34-1	47	①-1	
L1-X1080	41	59	12			35-1	49	②-2	
	58	78	3			35-1	49	②-1	
L1-X1100	20	27	21			35-1	49	①-2	
	58	78	17			35-1	49	①-1	
L1-Y1270	52	72	5	EA,EI		37-1	52	①-1	
L1-Y1280	52	72	4	D		37-1	52	①-2	
L1-Y1290	52	72	7	EA,EI		38-1	54	①-3	
L1-Y1300	52	72	6	D		38-1	54	①-5	
L5-G1010	62	82	13			38-1	54	①-4	
L5-T1170	51	71	19	D		38-1	54	②-1	
	53	73	2	D		38-1	54	①-1	
L5-T3020	51	71	20	EA,EI		38-1	54	①-2	
	54	74	2	EA,EI		38-1	54	②-2	
	55	75		EA,EI		39-1	56	①-5	
L5-V3150	50	70	9			39-1	56	①-3	
	59	79	11			39-1	56	①-4	
L5-V3350	48	68	25			40-1	58	①-1	
	59	79	10			40-1	58	①-2	
LA003	38	53	16			40-1	58	①-3	
	51	71	14			41-1	60	②-1	
	56	76	6			41-1	60	②-2	

PARTS CATALOG INDEX

PARTS No.	SECTION	PAGE	KEY No.	REMARKS	PARTS No.	SECTION	PAGE	KEY No.	REMARKS
NPN	1-1	2	③-4						
	1-2	3	④-1						
	1-2	3	④-2						
	1-2	3	④-3						
	1-2	3	④-4						
	1-2	3	④-6						
	1-2	3	④-7						
	1-2	3	④-8						
	1-2	3	④-9						
	34-1	47	⑦-1						
	34-1	47	⑦-2						
	37-1	52	⑩-1						
	37-1	52	⑩-2						
	39-1	56	⑳-2						
	39-1	56	⑳-3						
	39-1	56	⑳-1						
UK006	50	70	14						
	58	78	18						
WE003	50	70	15						
	58	78	19						
X412030	42	61	14						
X412050	26	34	26						
	35	48	7						
	42	61	15						
XA001	62	82	14						
XB001	48	68	21						
XB004	27	36	8						
	28	37	11						
	45	65	17						
XB011	17	24	19						
	48	68	22						
XB012	45	65	18						
	48	68	23						
XC010	12	19	15						
XC017	12	19	16						
Y408022	25	33							
	29	38	9						
Z408018	7	12	10						
Z408022	3	5	9						
	5	8	13						
	27	36	9						
	29	38	10						
	35	48	23						
	40	57	19						
	41	59	13						
	42	61							
	45	65	23						
	51	71	21						
Z408031	42	61	16						
	45	65	24						